No. PE-A-6BG1QCF

TCM®

PARTS MANUAL

DIESEL ENGINE

A-6BG1QC
A-6BG1TQC
A-6BG1QC02
A-6BG1QC03
A-6BG1QC05
A-6BG1QC05S
A-6BG1QC06
A-6BG1QC07
A-6BG1QC08
A-6BG1QC09

ISUZU

TCM CORPORATION

GENERAL CONTENTS

A: A-6BG1QC
B: A-6BG1TQC
C: A-6BG1QC02
D: A-6BG1QC03
E: A-6BG1QC05
F: A-6BG1QC06
G: A-6BG1QC07
H: A-6BG1QC08
J: A-6BG1QC09
K: A-6BG1QC05S

SECTION	LOC.No.
ご使用のまえに (1/2)	B-1
ご使用のまえに (2/2)	B-2
INTRODUCTION(1/2)	B-3
INTRODUCTION(2/2)	B-4
APPLICABLE MODEL	B-5
ENGINE BODY	
CYLINDER BLOCK	C-2
CHAMBER COVER & BREATHER	C-7
CRANKSHAFT, PISTON & FLYWHEEL	C-10
GEAR CASE	C-15
FLYWHEEL HOUSING	D-2
OIL PAN	D-4
HEAD & VALVE MECHANISM	
CYLINDER HEAD	E-2
VALVE MECHANISM	E-5
INLET & EXHAUST	
AIR INTAKE & EXHAUST SYSTEM (FOR A)	F-2
AIR INTAKE & EXHAUST SYSTEM (FOR B)	F-4
AIR INTAKE & EXHAUST SYSTEM (FOR C, D, E, F, G, H, J, K)	F-7
TURBO CHARGER (FOR B)	F-9
MUFFLER (FOR A, B)	F-11
LUBRICATION	
OIL PIPE	G-2
OIL PUMP	G-5
OIL FILTER (FOR A, B)	G-7
OIL FILTER (FOR C, D, E, F, G, H, J, K)	G-10
PARTIAL OIL FILTER (FOR B)	G-12

SECTION	LOC.No.
COOLING	
FAN	H-2
WATER PUMP (FOR A, B, C, D, J)	H-5
WATER PUMP (FOR E, F, G, H,K)	H-8
THERMOSTAT	H-10
OIL COOLER	H-13
FUEL	
INJECTION PIPING	I-2
FUEL FILTER	I-6
SEDIMENTER (FOR A, B)	I-8
NOZZLE & NOZZLE HOLDER	I-10
INJECTION PUMP MOUNT (FOR A, B, C, D, J)	I-12
INJECTION PUMP MOUNT (FOR E, F, G, H, K)	I-15
INJECTION PUMP (INNER PARTS)	J-1
GOVERNOR	J-8
FEED PUMP	J-13
COUPLING	J-15
ELECTRICAL	
STARTER & GENERATOR MOUNT	K-2
STARTER (INNER PARTS) (FOR A,B)	K-5
STARTER (INNER PARTS) (FOR C, D, E, F, H, J, K)	K-9
STARTER (INNER PARTS) (FOR G)	K-11
GENERATOR (INNER PARTS) (FOR A, B, H)	K-14
GENERATOR (INNER PARTS) (FOR C, D, E, F, G, J, K)	L-1
ELECTRICAL PARTS, FOOT & HANGER	L-3
PARTS NUMBER INDEX	M-2

B−1　ご使用のまえに（1／2）

このパーツマニアルは，TCM ホイールローダ および フォークリフト のエンジンの構成部品を収録しています。

部品ご注文について

部品ご注文の際は，必ず車両の形式・製造番号（号車），エンジンの形式・製造番号（号機），部品番号および注文数を明示してください。車両の製造番号（号車）は車両銘板に，エンジンの製造番号（号機）は，エンジンオイル注入口下のシリンダブロックに打刻しています。

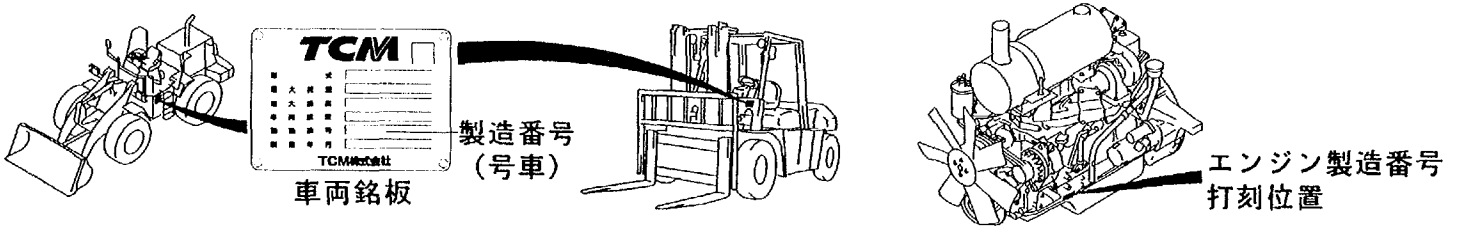

ご使用について

部品名称はわかっているが，部品番号を知りたいときは，……
→ 総目次を見ます。
→ 総索引からグループ索引を見て，部番リストのロケーション番号を見付けます。

組付け位置はわかっているが，部品番号を知りたいときは，……
→ 総目次を見ます。
→ 総索引からグループ索引を見て，イラストのロケーション番号を見付けます。

部品番号はわかっているが，形状，名称や履歴を知りたいときは，……
→ 総目次を見ます。
→ 部品番号順索引表から，部番リストのロケーション番号を見付けます。

→ イラストの確認，部品番号の検索，号車（号機）の確認をします。
→ 正確な部品番号，形状，名称や履歴がわかります。

B－2　ご使用のまえに（2／2）

略語および記号

ＡＳＳＹ	組立品を示します。
ＡＲ	必要に応じた数を使用します。
ＳＴＤ	標準品を示します。
ＬＯＣ．	ロケーション番号を示します。
＊	セットおよびキットの販売部品を示します。
t	厚みを示します。
ＧＲＤ	シリンダボディとライナの締め代グレード およびライナとピストンのすき間グレードを 示します。
＋	図示していません。
ＧＥ	大容量ジェネレータ仕様を示します。

部品は，品質向上のため予告なく変更することがありますので，あらかじめご了承ください。

INTRODUCTION (1/2)

This Parts Manual contains the component parts of the engine mounted on **TCM WHEEL LOADER** and **FORKLIFT TRUCK**.

How to order parts

When ordering, be sure to specify the model name and serial number (machine number) of your machine, as well as the part number and desired quantity for each part. For engine parts, specify the model name and serial number (engine number) as well as the part number and desired quantity for each part. The machine serial number (machine number) is indicated on the machine name plate, and the engine serial number (engine number) is punched on the cylinder block under the engine oil filler port.

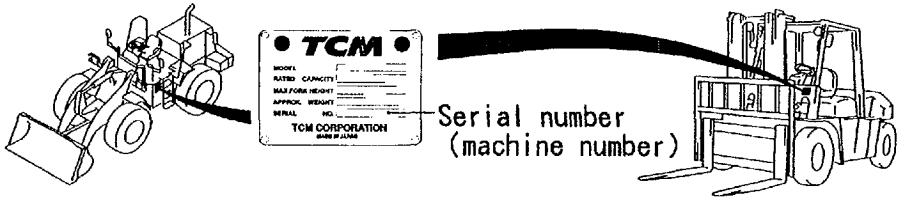

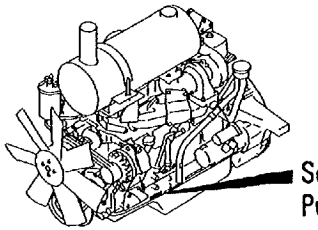

How to use the Parts Manual

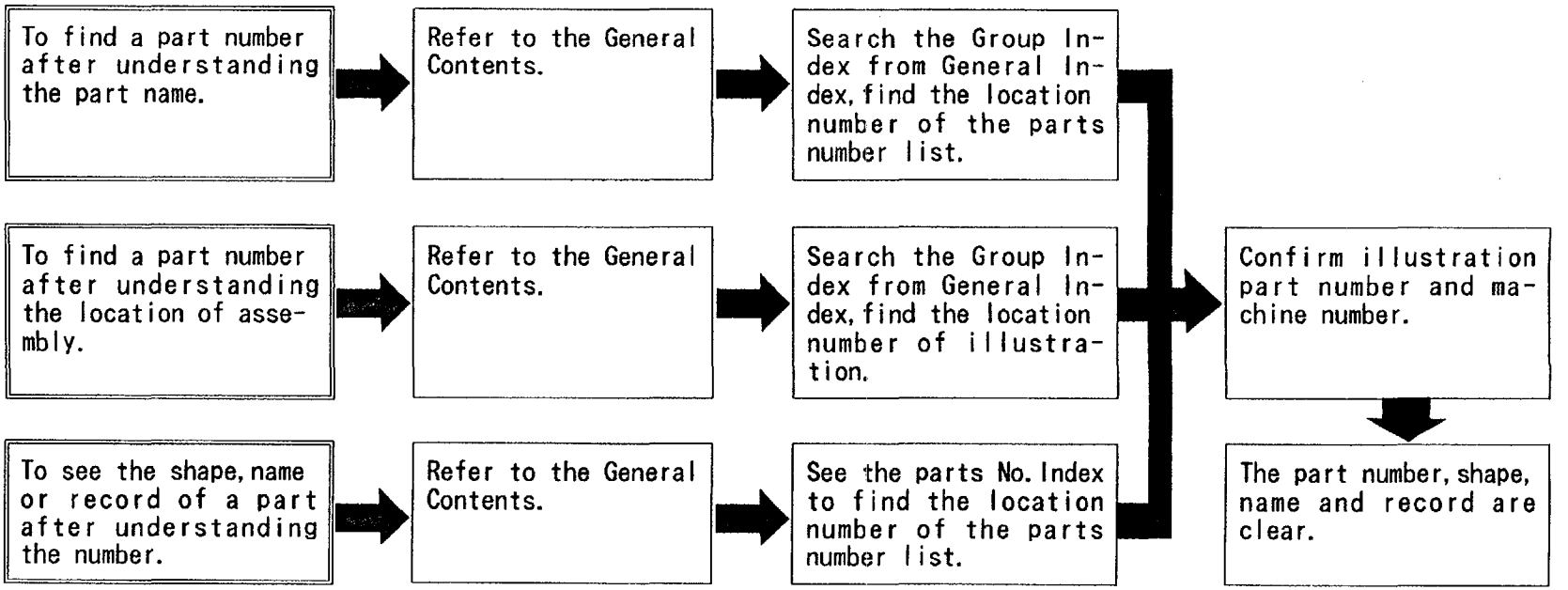

Abbreviations and symbols

ASSY····· Assembled unit.

AR ····· Quantity required.

STD ····· Standard part.

LOC. ···· Location number.

§ ····· Not sold separately.

* ····· The marketable part set or kit.

t ····· Thickness.

GRD ·· The grade of the tightening allowance between a cylinder body and a liner and the grade of the clearance between a liner and a piston are shown.
For parts replacement procedures, refer to the Shop Manual.

+ ····· Not illustrated.

GE ···· The specifications of the large-capacity generator are shown.

Materials and specifications subject to change without notice.

A	A-6BG1QC	Model	E835 (641) L16 (641)
B	A-6BG1TQC	Model	E840 (642) L19 (642)
C	A-6BG1QC02	Model	FD60Z8 (STD), FD60Z8 (GE) FD70Z8 (STD), FD70Z8 (GE)
D	A-6BG1QC03	Model	FD70Z8 (EXA), FD70Z8 (EXA/GE) FD80Z8 (EXA), FD80Z8 (EXA/GE) FD100Z8 (EXA), FD100Z8(EXA/GE)
E	A-6BG1QC05	Model	FD35 T8 (STD) FD40 T8 (STD) FD45 T8 (STD) FD50 T8 (STD)
F	A-6BG1QC06	Model	FD35 T8 (EXA, EXE) FD40 T8 (EXA, EXE) FD45 T8 (EXA, EXE) FD50 T8 (EXA, EXE)
G	A-6BG1QC07	Model	FD35 C8 (STD), FD35 C8 (GE) FD40 C8 (STD), FD40 C8 (GE) FD45 C8 (STD), FD45 C8 (GE)
H	A-6BG1QC08	Model	FD35 T8 (EXN), FD35 T8 (GE) FD40 T8 (EXN), FD40 T8 (GE) FD45 T8 (EXN), FD45 T8 (GE) FD50 T8 (EXN), FD50 T8 (GE)
J	A-6BG1QC09	Model	FD80Z8 (STD), FD80Z8 (GE) FD100Z8 (STD), FD100Z8 (GE)
K	A-6BG1QC05S	Model	FD35Z7(T) (US PRODUCTION) FD40Z7(T) (US PRODUCTION) FD45Z7(T) (US PRODUCTION)

C-2 CYLINDER BLOCK
(EZA61210)

A: A-6BG1QC
B: A-6BG1TQC
C: A-6BG1QC02
D: A-6BG1QC03
E: A-6BG1QC05
F: A-6BG1QC06
G: A-6BG1QC07
H: A-6BG1QC08
J: A-6BG1QC09
K: A-6BG1QC05S

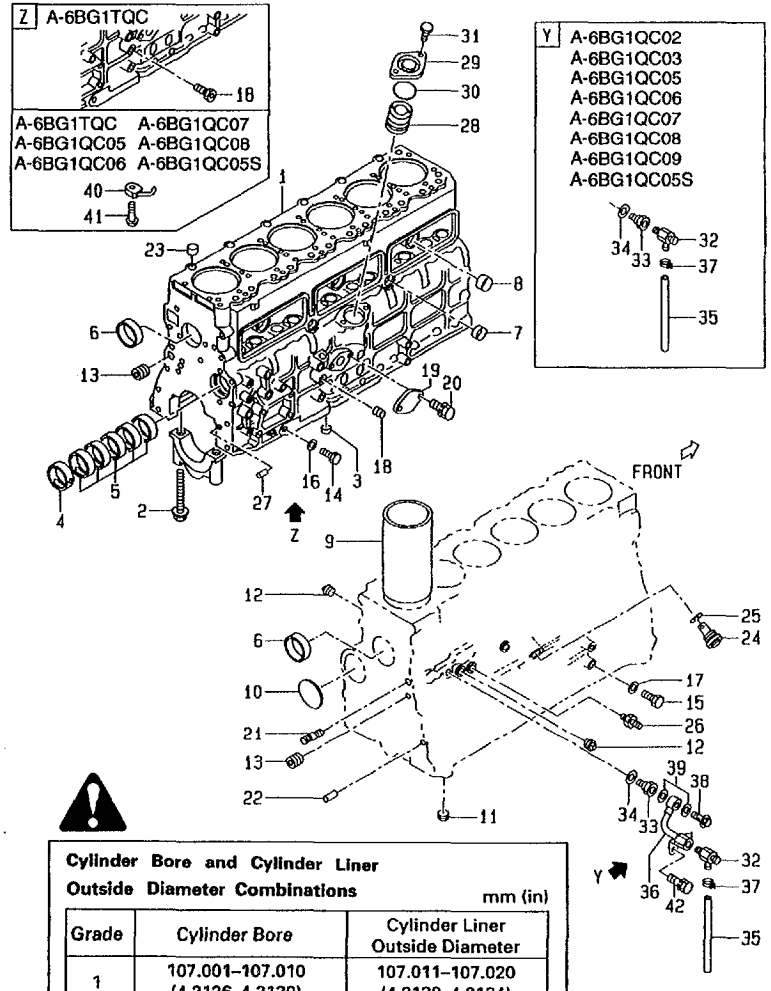

Cylinder Bore and Cylinder Liner Outside Diameter Combinations

mm (in)

Grade	Cylinder Bore	Cylinder Liner Outside Diameter
1	107.001–107.010 (4.2126–4.2130)	107.011–107.020 (4.2130–4.2134)
2	107.011–107.020 (4.2130–4.2134)	107.021–107.030 (4.2134–4.2138)
3	107.021–107.030 (4.2134–4.2138)	107.031–107.040 (4.2138–4.2142)

No.	Part No.	Description	Req'd	Remarks • Serial No.
1	Z-1-11210-340-7	BLOCK,CYL	1	A,C,D,E,F,G,H,J,K INC.2-9
-	Z-1-11210-443-6	BLOCK,CYL	1	B INC.2-9
2	Z-1-09000-469-1	BOLT	14	
3	Z-5-11257-001-1	DOWEL	1	
4	Z-9-11611-048-0	METAL	1	
5	Z-9-11613-035-0	METAL	5	
6	Z-1-09600-052-0	CUP	2	
7	Z-5-11219-014-0	CUP	2	
8	Z-1-09600-012-1	CUP	3	
S1	Z-1-87811-690-0	SET,LINER	6	A,C,D,J GRD=1 INC.9 & etc.
S2	Z-1-87811-573-0	SET,LINER	6	B GRD=1 INC.9 & etc. -1996.8
-	Z-1-87811-795-0	SET,LINER	6	B GRD=1 INC.9 & etc. 1996.9-1998.1
-	Z-1-87811-903-0	SET,LINER	6	B GRD=1 INC.9 & etc. 1998.2-
S3	Z-1-87811-888-0	SET,LINER	6	E,F,G,H,K GRD=1 INC.9 & etc.
S4	Z-1-87811-691-0	SET,LINER	6	A,C,D,J GRD=2 INC.9 & etc.
S5	Z-1-87811-574-0	SET,LINER	6	B GRD=2 INC.9 & etc. -1996.8
-	Z-1-87811-796-0	SET,LINER	6	B GRD=2 INC.9 & etc. 1996.9-1998.1
-	Z-1-87811-904-0	SET,LINER	6	B GRD=3 INC.9 & etc. 1998.2-
S6	Z-1-87811-889-0	SET,LINER	6	E,F,G,H,K GRD=3 INC.9 & etc.

C-3 CYLINDER BLOCK
(EZA61210)

A: A-6BG1QC
B: A-6BG1TQC
C: A-6BG1QC02
D: A-6BG1QC03
E: A-6BG1QC05
F: A-6BG1QC06
G: A-6BG1QC07
H: A-6BG1QC08
J: A-6BG1QC09
K: A-6BG1QC05S

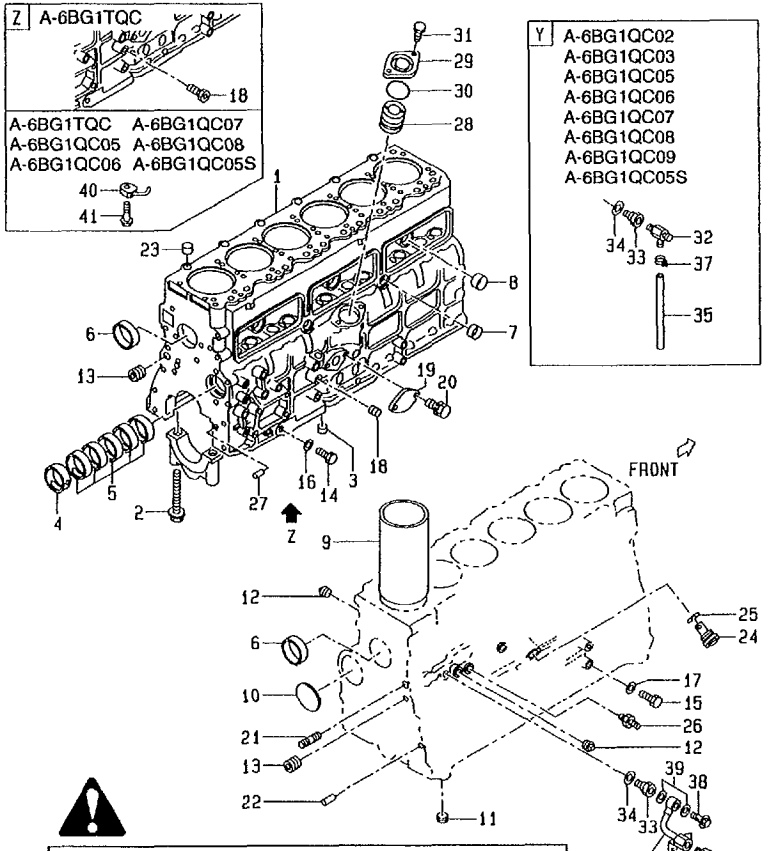

Cylinder Bore and Cylinder Liner Outside Diameter Combinations mm (in)

Grade	Cylinder Bore	Cylinder Liner Outside Diameter
1	107.001–107.010 (4.2126–4.2130)	107.011–107.020 (4.2130–4.2134)
2	107.011–107.020 (4.2130–4.2134)	107.021–107.030 (4.2134–4.2138)
3	107.021–107.030 (4.2134–4.2138)	107.031–107.040 (4.2138–4.2142)

No.	Part No.	Description	Req'd	Remarks • Serial No.
S7	Z-1-87811-692-0	SET,LINER	6	A,C,D,J GRD=3 INC.9 & etc.
S8	Z-1-87811-575-0	SET,LINER	6	B GRD=3 INC.9 & etc. -1996.8
-	Z-1-87811-797-0	SET,LINER	6	B GRD=3 INC.9 & etc. 1996.9-1998.1
-	Z-1-87811-905-0	SET,LINER	6	B GRD=3 INC.9 & etc. 1998.2-
S9	Z-1-87811-890-0	SET,LINER	6	E,F,G,H,K GRD=3 INC.9 & etc.
S10	Z-1-87811-693-0	SET,LINER	6	A,C,D,J INC.9 & etc.
S11	Z-1-87811-576-0	SET,LINER	6	B INC.9 & etc. -1996.8
-	Z-1-87811-798-0	SET,LINER	6	B INC.9 & etc. 1996.9-1998.1
-	Z-1-87811-906-0	SET,LINER	6	B INC.9 & etc. 1998.2-
S12	Z-1-87811-891-0	SET,LINER	6	E,F,G,H,K INC.9 & etc.
9	Z-1-11261-248-0	* LINER,CYL	6	GRD=1 PISTON GRADE=AX
-	Z-1-11261-249-0	* LINER,CYL	6	GRD=1 PISTON GRADE=CX
-	Z-1-11261-250-0	* LINER,CYL	6	GRD=2 PISTON GRADE=AX
-	Z-1-11261-251-0	* LINER,CYL	6	GRD=2 PISTON GRADE=CX
-	Z-1-11261-252-0	* LINER,CYL	6	GRD=3 PISTON GRADE=AX
-	Z-1-11261-253-0	* LINER,CYL	6	GRD=3 PISTON GRADE=CX
-	Z-1-11261-254-0	* LINER,CYL	6	PISTON GRADE=AX
-	Z-1-11261-255-0	* LINER,CYL	6	PISTON GRADE=CX
10	Z-9-09860-019-0	PLUG	1	PLATE
11	Z-1-09605-066-0	PLUG	1	
12	Z-5-09605-018-0	PLUG	8	A,C,D,E,F,G,H,J,K
13	Z-1-09605-068-1	PLUG	2	
14	Z-9-9920-2314-0	PLUG	1	
15	Z-9-9920-2312-0	PLUG	1	

C-4 CYLINDER BLOCK
(EZA61210)

A: A-6BG1QC
B: A-6BG1TQC
C: A-6BG1QC02
D: A-6BG1QC03
E: A-6BG1QC05
F: A-6BG1QC06
G: A-6BG1QC07
H: A-6BG1QC08
J: A-6BG1QC09
K: A-6BG1QC05S

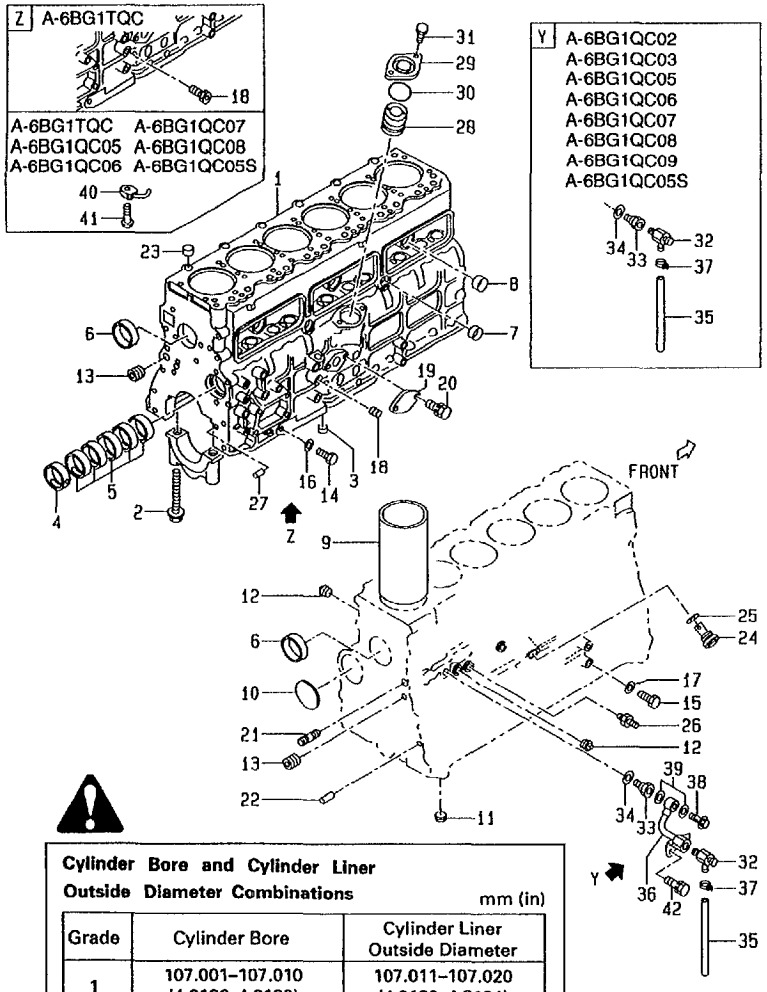

Cylinder Bore and Cylinder Liner Outside Diameter Combinations mm (in)

Grade	Cylinder Bore	Cylinder Liner Outside Diameter
1	107.001–107.010 (4.2126–4.2130)	107.011–107.020 (4.2130–4.2134)
2	107.011–107.020 (4.2130–4.2134)	107.021–107.030 (4.2134–4.2138)
3	107.021–107.030 (4.2134–4.2138)	107.031–107.040 (4.2138–4.2142)

No.	Part No.	Description	Req'd	Remarks • Serial No.
K1	Z-1-87811-031-4	KIT,REPAIR	1	A ENGINE OVERHAUL INC.16,17,25,30,34 & etc.
K2	Z-1-87811-223-2	KIT,REPAIR	1	B ENGINE OVERHAUL INC.16,17,25,30,34 & etc.
K3	Z-1-87811-628-2	KIT,REPAIR	1	C,D,E,F,H,J,K ENGINE OVERHAUL INC.16,17,25,30,34 & etc.
K4	Z-1-87811-887-0	KIT,REPAIR	1	G ENGINE OVERHAUL INC.16,17,25,30,34 & etc.
16	Z-9-0957-1414-0	* PACKING	1	A,B -1998.3
-	Z-9-0957-2014-0	* PACKING	1	A,B 1998.4-
-	Z-9-0957-2014-0	* PACKING	1	C,D,E,F,G,H,J,K
17	Z-9-0957-1412-0	* PACKING	1	
18	Z-1-09605-079-1	PLUG	1	A,C,D,E,F,G,H,J,K
-	Z-1-09660-101-0	CONNECTOR	1	B
19	Z-1-11219-163-0	COVER	1	A,C,D,E,F,G,H,J,K
20	Z-0-5014-0820-0	BOLT	2	A -1997.1
-	Z-0-2868-0820-0	BOLT	2	A 1997.2-
-	Z-0-2868-0820-0	BOLT	2	C,D,E,F,G,H,J,K
21	Z-5-09300-023-1	STUD	1	
22	Z-9-0815-1018-0	PIN,STRAIGHT	2	
23	Z-8-94148-079-0	DOWEL	2	
24	Z-8-97023-339-0	VALVE	1	RELIEF INC.25
25	Z-5-09623-035-0	* PACKING	1	
26	Z-5-09654-013-0	NIPPLE	1	
27	Z-1-09740-078-0	PIN	1	TIMING GEAR CASE
28	Z-9-11224-602-1	BUSHING	1	
29	Z-1-11219-129-1	COVER	1	
30	Z-1-09623-465-0	* O-RING	1	
31	Z-0-5014-0822-0	BOLT	2	
32	Z-1-09680-024-0	COCK	1	B,C,D,E,F,G,H,J,K DRAIN
33	Z-5-09666-002-1	NIPPLE	1	A,B

C-5 CYLINDER BLOCK
(EZA61210)

A: A-6BG1QC
B: A-6BG1TQC
C: A-6BG1QC02
D: A-6BG1QC03
E: A-6BG1QC05
F: A-6BG1QC06
G: A-6BG1QC07
H: A-6BG1QC08
J: A-6BG1QC09
K: A-6BG1QC05S

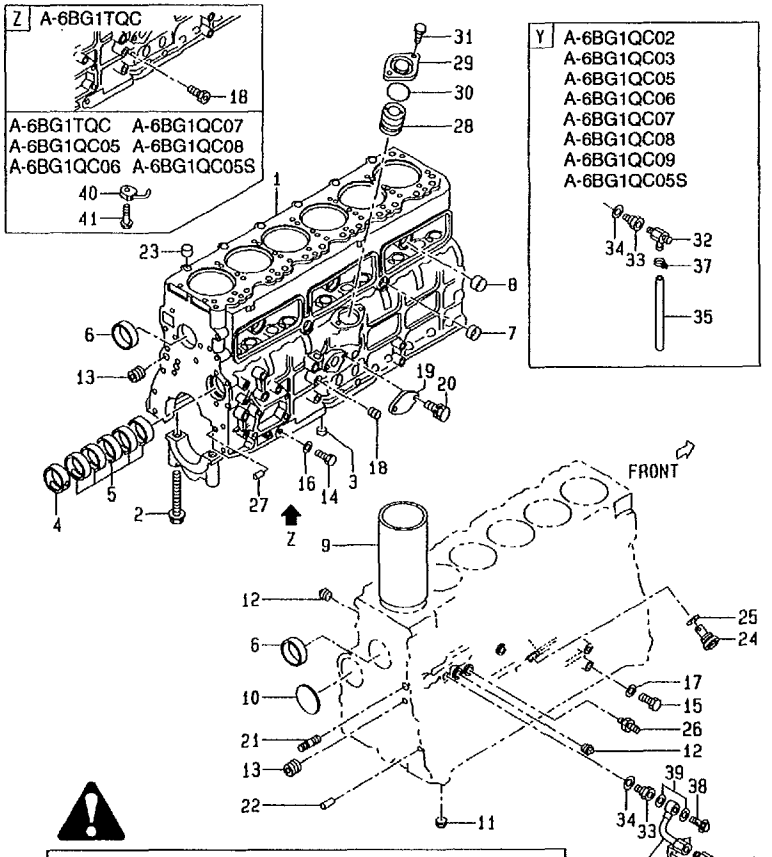

Cylinder Bore and Cylinder Liner Outside Diameter Combinations mm (in)

Grade	Cylinder Bore	Cylinder Liner Outside Diameter
1	107.001–107.010 (4.2126–4.2130)	107.011–107.020 (4.2130–4.2134)
2	107.011–107.020 (4.2130–4.2134)	107.021–107.030 (4.2134–4.2138)
3	107.021–107.030 (4.2134–4.2138)	107.031–107.040 (4.2138–4.2142)

No.	Part No.	Description	Req'd	Remarks · Serial No.
33	Z-1-09666-036-0	JOINT	1	C,D,E,F,G,H,J,K
34	Z-1-09630-115-0	* PACKING	1	
35	Z-9-09914-701-0	HOSE,VINYL	1	
36	Z-1-13721-341-2	PIPE	1	A,B
37	Z-8-97015-754-0	CLIP	1	
38	Z-1-09675-086-0	BOLT,EYE	1	A,B
39	Z-1-09630-085-0	PACKING	2	A,B
40	Z-1-13342-132-0	JET	6	B OIL
-	Z-1-13342-110-0	JET	6	E,F,G,H,K OIL
41	Z-1-13161-012-0	VALVE,CHECK	6	B,E,F,G,H,K
42	Z-0-5004-1020-0	BOLT	2	A,B -1997.1
-	Z-0-2868-1020-0	BOLT	2	A,B 1997.2-

C-7 CHAMBER COVER & BREATHER
(EZA61220)

A: A-6BG1QC
B: A-6BG1TQC
C: A-6BG1QC02
D: A-6BG1QC03
E: A-6BG1QC05
F: A-6BG1QC06
G: A-6BG1QC07
H: A-6BG1QC08
J: A-6BG1QC09
K: A-6BG1QC05S

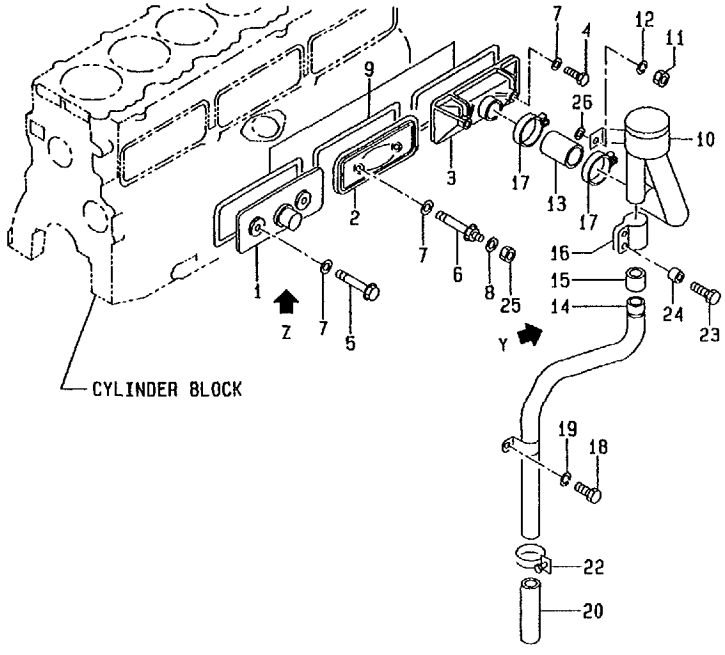

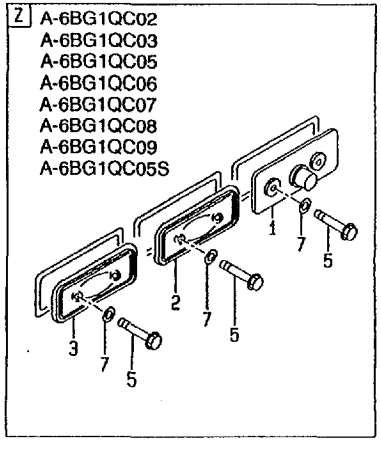

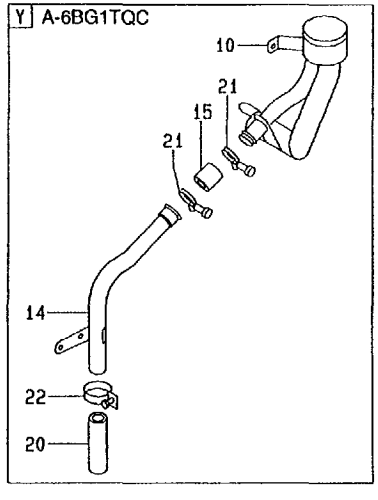

No.	Part No.	Description	Req'd	Remarks · Serial No.
1	Z-1-11291-080-1	COVER	1	A,B
-	Z-9-11291-605-1	COVER	1	C,D,E,F,G,H,J,K
2	Z-8-97028-525-0	COVER	1	
3	Z-5-11290-145-1	COVER	1	A,B
-	Z-8-97028-525-0	COVER	1	C,D,E,F,G,H,J,K
4	Z-1-09052-022-1	BOLT	2	A,B
5	Z-8-94367-530-1	BOLT	3	A,B
-	Z-8-94367-530-1	BOLT	6	C,D,E,F,G
6	Z-1-09052-018-1	BOLT	1	A,B
K1	Z-1-87811-031-4	KIT,REPAIR	1	A ENGINE OVERHAUL INC.7,9 & etc.
K2	Z-1-87811-223-2	KIT,REPAIR	1	B ENGINE OVERHAUL INC.7,9 & etc.
K3	Z-1-87811-628-2	KIT,REPAIR	1	C,D,E,F,H,J,K ENGINE OVERHAUL INC.7,9 & etc.
K4	Z-1-87811-887-0	KIT,REPAIR	1	G ENGINE OVERHAUL INC.7,9 & etc.
7	Z-9-0957-2008-0	* PACKING	6	
8	Z-9-0916-0508-0	WASHER	1	A
9	Z-8-94367-368-1	* PACKING	3	
10	Z-1-11740-171-0	BREATHER	1	A -1997.12
-	Z-1-11740-252-0	BREATHER	1	A 1998.1-
-	Z-1-11740-226-1	BREATHER	1	B -1997.12
-	Z-1-11740-253-0	BREATHER	1	B 1998.1-
11	Z-9-0911-0508-0	NUT	2	A,B -1997.12
-	Z-0-9115-0208-0	NUT	2	A,B 1998.1-
12	Z-9-0915-0508-0	WASHER	2	A,B -1997.12
13	Z-1-09360-439-0	HOSE	1	A,B

C-8 CHAMBER COVER & BREATHER
(EZA61220)

A: A-6BG1QC
B: A-6BG1TQC
C: A-6BG1QC02
D: A-6BG1QC03
E: A-6BG1QC05
F: A-6BG1QC06
G: A-6BG1QC07
H: A-6BG1QC08
J: A-6BG1QC09
K: A-6BG1QC05S

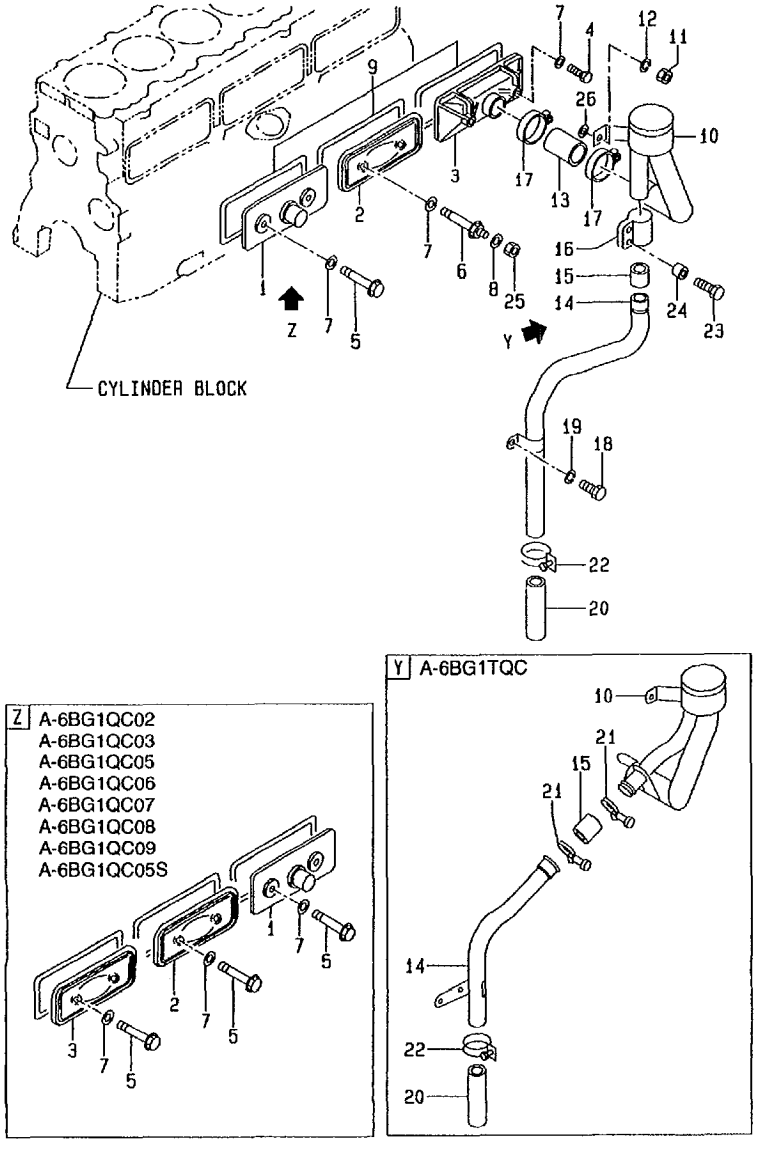

No.	Part No.	Description	Req'd	Remarks • Serial No.
14	Z-1-11742-011-0	PIPE	1	A DRAIN
-	Z-1-11742-022-0	PIPE,DRAIN	1	B
15	Z-5-09360-978-0	HOSE	1	A
-	Z-5-11749-032-0	HOSE	1	B
16	Z-9-09715-067-0	CLIP	1	A
17	Z-1-09704-057-0	CLIP	2	A -1995.4
-	Z-8-94162-568-0	CLIP	2	A 1995.5-
-	Z-8-94162-568-0	CLIP	2	B
18	Z-0-2080-1016-0	BOLT	2	A -1997.4
-	Z-0-2808-1016-0	BOLT	2	A 1997.5-
19	Z-9-0915-0510-0	WASHER	2	A -1997.4
20	Z-8-94137-682-0	PIPE,VINYL	1	A,B
21	Z-5-09704-031-3	CLIP	2	B
22	Z-9-09915-666-1	CLIP	1	A,B
23	Z-0-2080-0625-0	BOLT	2	A
24	Z-8-94235-157-0	PIECE	2	A DISTANCE
25	Z-9-0911-0508-0	NUT	1	A,B
26	Z-9-0916-4608-0	WASHER	2	A,B 1998.1-

C-10 CRANKSHAFT,PISTON & FLYWHEEL
(EZA61230)

A: A-6BG1QC
B: A-6BG1TQC
C: A-6BG1QC02
D: A-6BG1QC03
E: A-6BG1QC05
F: A-6BG1QC06
G: A-6BG1QC07
H: A-6BG1QC08
J: A-6BG1QC09
K: A-6BG1QC05S

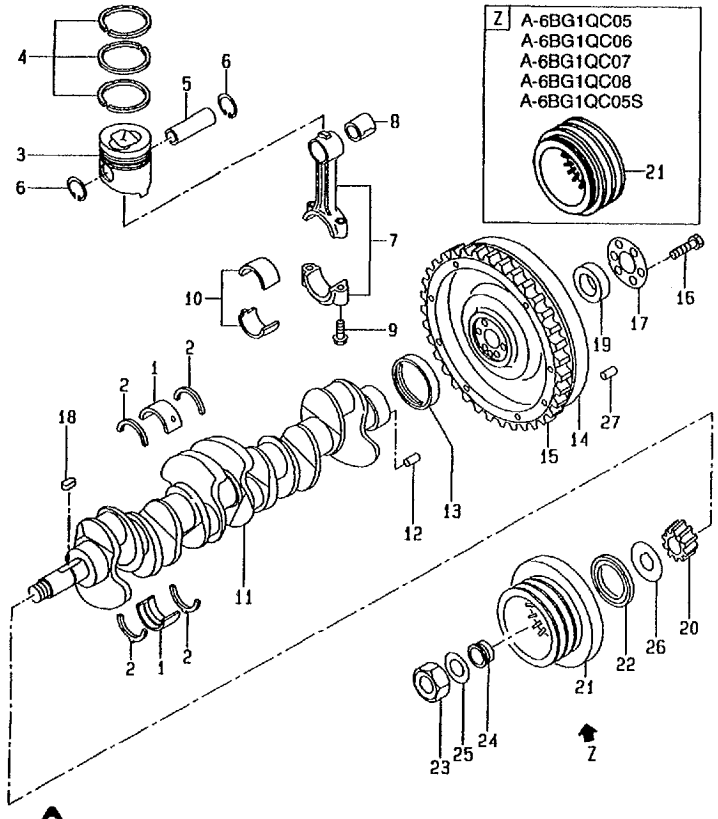

Piston Outside Diameter

Measure the piston outside diameter at the measuring piston shown in the illustration.

Piston Grade mm (in)

Ⓐ	Ⓒ
104.955–104.974 (4.1321–4.1328)	104.975–104.994 (4.1329–4.1336)

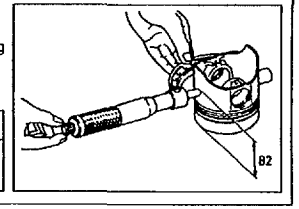

No.	Part No.	Description	Req'd	Remarks • Serial No.
1	Z-1-11510-074-2	KIT,BUSHING,STD	1	INC.2
2	Z-1-11680-001-2	SET,METAL	2	
S1	Z-1-87811-690-0	SET,LINER	6	A,C,D,J GRD=1 INC.3-6,8 & etc.
S2	Z-1-87811-573-0	SET,LINER	6	B GRD=1 INC.3-6,8 & etc. -1996.8
-	Z-1-87811-795-0	SET,LINER	6	B GRD=1 INC.3-6,8 & etc. 1996.9-1998.1
-	Z-1-87811-903-0	SET,LINER	6	B GRD=1 INC.3-6,8 & etc. 1998.2-
S3	Z-1-87811-888-0	SET,LINER	6	E,F,G,H,K GRD=1 INC.3-6,8 & etc.
S4	Z-1-87811-691-0	SET,LINER	6	A,C,D,J GRD=2 INC.3-6,8 & etc.
S5	Z-1-87811-574-0	SET,LINER	6	B GRD=2 INC.3-6,8 & etc. -1996.8
-	Z-1-87811-796-0	SET,LINER	6	B GRD=2 INC.3-6,8 & etc. 1996.9-1998.1
-	Z-1-87811-904-0	SET,LINER	6	B GRD=3 INC.3-6,8 & etc. 1998.2-
S6	Z-1-87811-889-0	SET,LINER	6	E,F,G,H,K GRD=2 INC.3-6,8 & etc.
S7	Z-1-87811-692-0	SET,LINER	6	A,C,D,J GRD=3 INC.3-6,8 & etc.
S8	Z-1-87811-575-0	SET,LINER	6	B GRD=3 INC.3-6,8 & etc. -1996.8
-	Z-1-87811-797-0	SET,LINER	6	B GRD=3 INC.3-6,8 & etc. 1996.9-1998.1
-	Z-1-87811-905-0	SET,LINER	6	B GRD=3 INC.3-6,8 & etc. 1998.2-

C-11 CRANKSHAFT,PISTON & FLYWHEEL
(EZA61230)

A: A-6BG1QC
B: A-6BG1TQC
C: A-6BG1QC02
D: A-6BG1QC03
E: A-6BG1QC05
F: A-6BG1QC06
G: A-6BG1QC07
H: A-6BG1QC08
J: A-6BG1QC09
K: A-6BG1QC05S

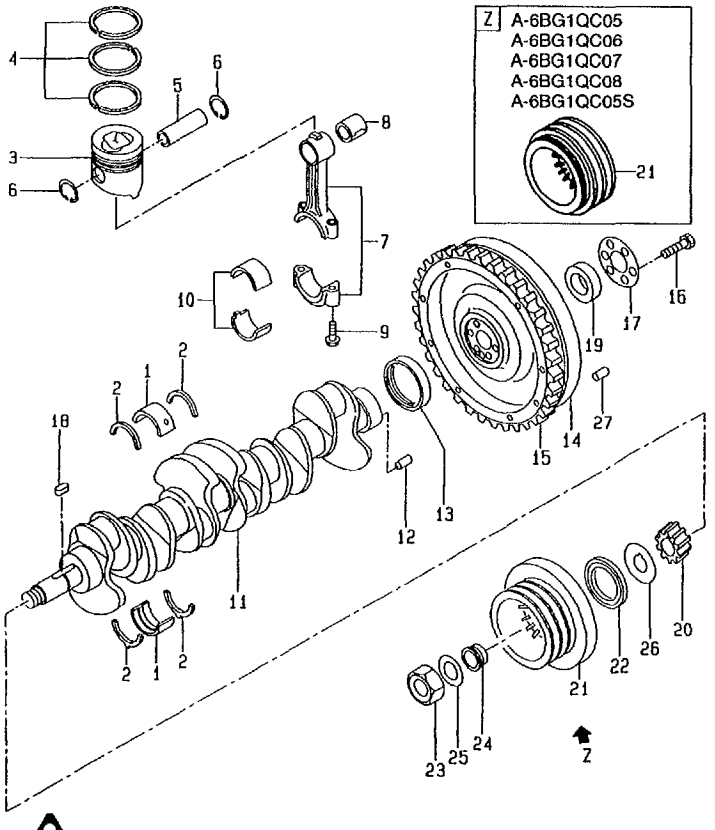

Piston Outside Diameter

Measure the piston outside diameter at the measuring piston shown in the illustration.

Piston Grade mm (in)

Ⓐ	Ⓒ
104.955–104.974 (4.1321–4.1328)	104.975–104.994 (4.1329–4.1336)

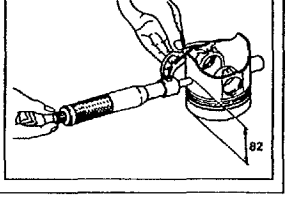

No.	Part No.	Description	Req'd	Remarks · Serial No.
S9	Z-1-87811-890-0	SET,LINER	6	E,F,G,H,K GRD=2 INC.3-6,8 & etc.
S10	Z-1-87811-693-0	SET,LINER	6	A,C,D,J GRD=4 INC.3-6,8 & etc.
S11	Z-1-87811-576-0	SET,LINER	6	B GRD=4 INC.3-6,8 & etc. -1996.8
-	Z-1-87811-798-0	SET,LINER	6	B GRD=4 INC.3-6,8 & etc. 1996.9-1998.1
-	Z-1-87811-906-0	SET,LINER	6	B GRD=4 INC.3-6,8 & etc. 1998.2-
S12	Z-1-87811-891-0	SET,LINER	6	E,F,G,H,K GRD=4 INC.3-6,8 & etc.
3	Z-1-12111-769-0	* PISTON	6	A,C,D,J GRD=AX
-	Z-1-12111-770-0	* PISTON	6	A,C,D,J GRD=CX
-	Z-1-12111-785-0	* PISTON	6	B GRD=AX -1996.8
-	Z-1-12111-786-0	* PISTON	6	B GRD=CX -1996.8
-	Z-1-12111-911-0	* PISTON	6	B GRD=AX 1996.9-1998.1
-	Z-1-12111-912-0	* PISTON	6	B GRD=CX 1996.9-1998.1
-	Z-1-12111-917-0	* PISTON	6	B GRD=AX 1998.2-
-	Z-1-12111-918-0	* PISTON	6	B GRD=CX 1998.2-
-	Z-1-12111-932-0	* PISTON	6	E,F,G,H,K GRD=AX

C-12 CRANKSHAFT,PISTON & FLYWHEEL
(EZA61230)

A: A-6BG1QC
B: A-6BG1TQC
C: A-6BG1QC02
D: A-6BG1QC03
E: A-6BG1QC05
F: A-6BG1QC06
G: A-6BG1QC07
H: A-6BG1QC08
J: A-6BG1QC09
K: A-6BG1QC05S

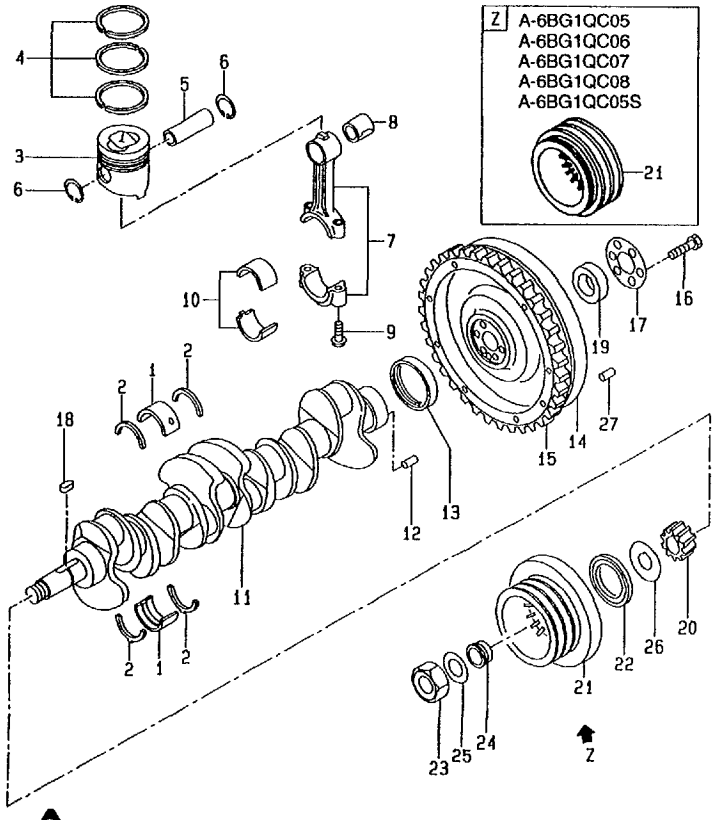

No.	Part No.	Description	Req'd	Remarks • Serial No.
3	Z-1-12111-933-0	* PISTON	6	E,F,G,H,K GRD=CX
4	Z-1-12121-101-1	* SET,RING	6	A,C,D,E,F,G,H,J,K
-	Z-1-12121-115-0	* SET,RING	6	B
5	Z-9-12211-604-0	* PIN,PISTON	6	A,C,D,E,F,G,H,J,K
-	Z-1-12211-033-1	* PIN,PISTON	6	B
6	Z-8-94107-575-1	* RING,SNAP	12	
7	Z-1-12230-104-1	ROD	6	A,C,D,E,F,G,H,J,K INC.8,9
-	Z-1-12230-129-1	ROD,CONNECTING	6	B INC.8,9
8	Z-1-12251-027-0	* BUSHING	6	A,C,D,E,F,G,H,J,K
-	Z-1-12251-032-0	* BUSHING	6	B
9	Z-1-12235-027-1	BOLT	12	
10	Z-9-12271-608-0	SET,METAL	6	
11	Z-1-12310-448-0	SHAFT	1	A,C,D,E,F,G,H,J,K INC.12
-	Z-1-12310-470-0	SHAFT	1	B INC.12
12	Z-9-0815-1220-0	PIN,STRAIGHT	1	
13	Z-5-12319-003-2	RING,WEAR	1	
14	Z-1-12331-178-2	FLYWHEEL	1	A,B
-	Z-1-12331-149-2	FLYWHEEL	1	C,D,J
-	Z-5-12331-045-2	FLYWHEEL	1	E,F,H
-	Z-5-12331-052-3	FLYWHEEL	1	G
-	Z-5-12331-267-0	FLYWHEEL	1	K
15	Z-9-12333-607-0	GEAR,RING	1	A,B,C,D,E,F,G,H,J
-	Z-1-12333-017-0	GEAR	1	K RING
16	Z-9-09801-334-0	BOLT	6	A,B,C,D,J
-	Z-9-9206-1638-0	BOLT	6	E,F,G,H,K
17	Z-5-12336-008-1	WASHER	1	
18	Z-5-09738-001-0	KEY	1	
19	Z-1-09330-077-1	BUSHING	1	A,B
-	Z-1-09800-214-0	BRG,BALL	1	C,D,E,F,G,H,J,K
20	Z-9-12521-043-0	GEAR	1	A CRANKSHAFT -1995.10

Piston Outside Diameter

Measure the piston outside diameter at the measuring piston shown in the illustration.

Piston Grade — mm (in)

Ⓐ	Ⓒ
104.955–104.974 (4.1321–4.1328)	104.975–104.994 (4.1329–4.1336)

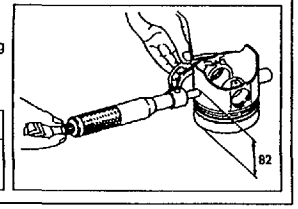

C-13 CRANKSHAFT,PISTON & FLYWHEEL
(EZA61230)

A: A-6BG1QC
B: A-6BG1TQC
C: A-6BG1QC02
D: A-6BG1QC03
E: A-6BG1QC05
F: A-6BG1QC06
G: A-6BG1QC07
H: A-6BG1QC08
J: A-6BG1QC09
K: A-6BG1QC05S

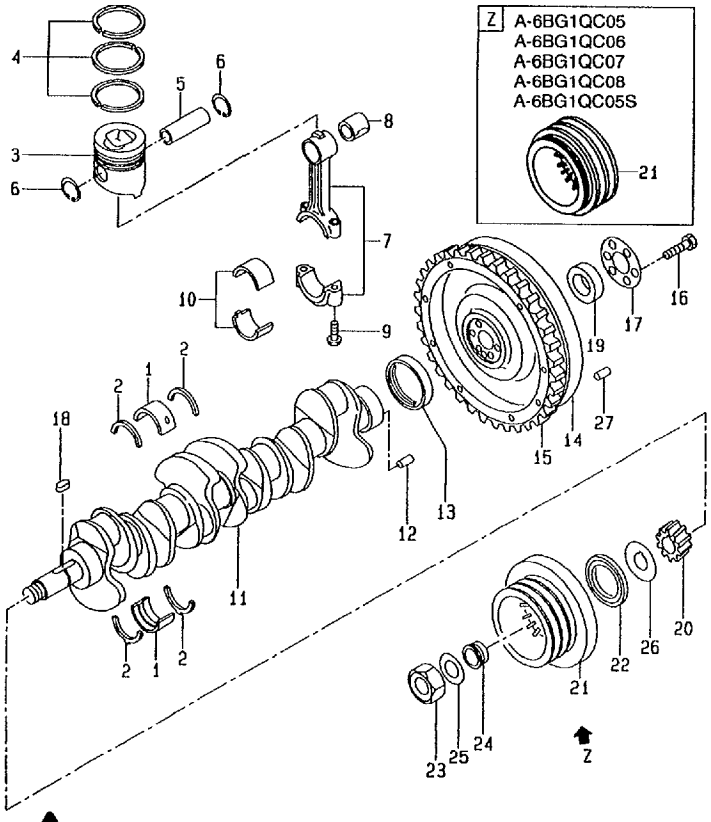

No.	Part No.	Description	Req'd	Remarks • Serial No.
20	Z-1-12521-008-0	GEAR	1	A CRANKSHAFT 1995.11-1998.5
-	Z-1-12521-008-0	GEAR	1	B CRANKSHAFT -1998.5
-	Z-8-97137-910-0	GEAR	1	A,B CRANKSHAFT 1998.6-
-	Z-8-97137-910-0	GEAR	1	C,D,E,F,G,H,J,K CRANKSHAFT
21	Z-1-12371-158-0	PULLEY	1	A,B -1997.1
-	Z-1-12371-248-0	PULLEY	1	A,B 1997.2-
-	Z-1-12371-242-0	PULLEY	1	C,D,J
-	Z-1-12371-364-0	PULLEY	1	E,F,G,H,K
22	Z-5-12362-003-1	THROWER	1	
23	Z-9-09840-107-1	NUT	1	
24	Z-9-12379-045-0	BUSHING	1	
25	Z-9-09851-431-0	WASHER	1	
26	Z-1-12362-003-1	THROWER,OIL	1	
27	Z-9-0815-1022-0	PIN	2	C,D,E,F,G,H,J,K

Piston Outside Diameter

Measure the piston outside diameter at the measuring *piston shown in the illustration.*

Piston Grade — mm (in)

Ⓐ	Ⓒ
104.955–104.974 (4.1321–4.1328)	104.975–104.994 (4.1329–4.1336)

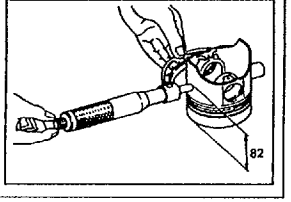

C-15 GEAR CASE
(EZA61240)

A : A-6BG1QC
B : A-6BG1TQC
C : A-6BG1QC02
D : A-6BG1QC03
E : A-6BG1QC05
F : A-6BG1QC06
G : A-6BG1QC07
H : A-6BG1QC08
J : A-6BG1QC09
K : A-6BG1QC05S

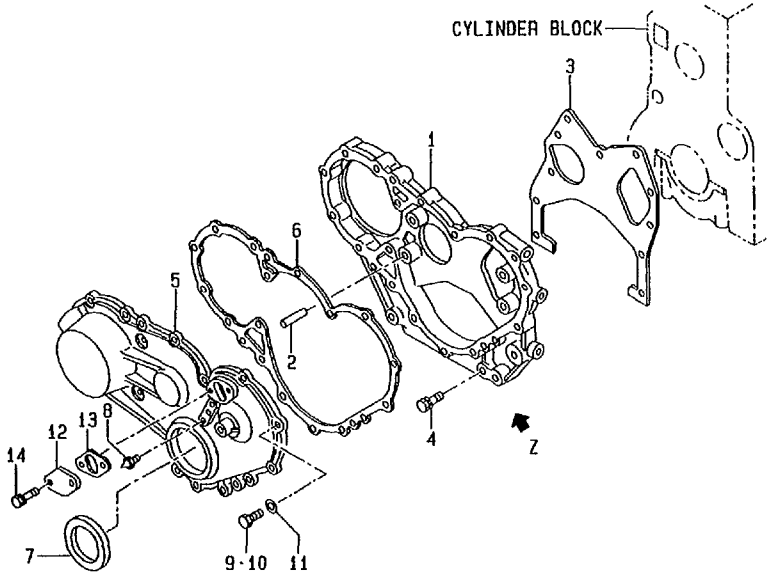

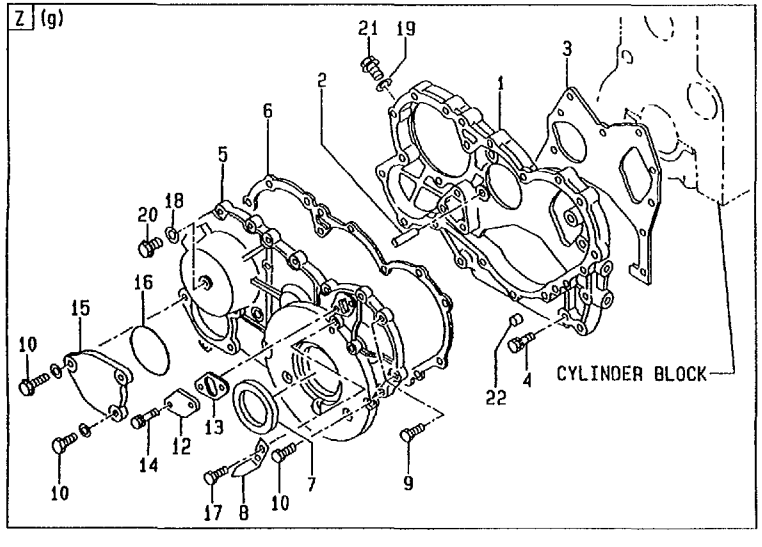

No.	Part No.	Description	Req'd	Remarks · Serial No.
1	Z-5-11311-011-3	CASE	1	A,B,C,D,E,F,H,J,K TIMING GEAR
-	Z-8-94457-910-2	CASE	1	G TIMING GEAR
2	Z-9-0815-1018-0	PIN,STRAIGHT	1	
K1	Z-1-87811-031-4	KIT,REPAIR	1	A ENGINE OVERHAUL INC.3,6,7 & etc.
K2	Z-1-87811-223-2	KIT,REPAIR	1	B ENGINE OVERHAUL INC.3,6,7 & etc.
K3	Z-1-87811-628-2	KIT,REPAIR	1	C,D,E,F,H,J,K ENGINE OVERHAUL INC.3,6,7 & etc.
K4	Z-1-87811-887-0	KIT,REPAIR	1	G ENGINE OVERHAUL INC.3,6,7 & etc.
3	Z-8-94370-671-0	* PACKING	1	
4	Z-0-5004-0845-0	BOLT	2	A,B -1997.4
-	Z-0-2808-0845-0	BOLT	2	A,B 1997.5-
-	Z-0-2808-0845-0	BOLT	2	C,D,E,F,G,H,J,K
-	Z-0-5004-0820-0	BOLT	4	A,B -1997.4
-	Z-0-2868-0820-0	BOLT	4	A,B 1997.5-
-	Z-0-2868-0820-0	BOLT	4	C,D,E,F,G,H,J,K
5	Z-1-11321-079-0	COVER	1	A,B,C,D,E,F,H,J,K
-	Z-8-94371-853-2	COVER	1	G
6	Z-8-97022-216-0	* PACKING	1	A,B,C,D,E,F,H,J,K
-	Z-1-11322-052-0	* PACKING	1	G
7	Z-1-09625-438-0	* SEAL,OIL	1	
8	Z-5-11327-009-0	POINTER	1	A,B,C,D,E,F,H,J,K TIMING
-	Z-1-11327-036-0	POINTER	1	G TIMING
9	Z-0-5014-0825-0	BOLT	7	A,B -1997.4

C-16 GEAR CASE
(EZA61240)

A: A-6BG1QC
B: A-6BG1TQC
C: A-6BG1QC02
D: A-6BG1QC03
E: A-6BG1QC05
F: A-6BG1QC06
G: A-6BG1QC07
H: A-6BG1QC08
J: A-6BG1QC09
K: A-6BG1QC05S

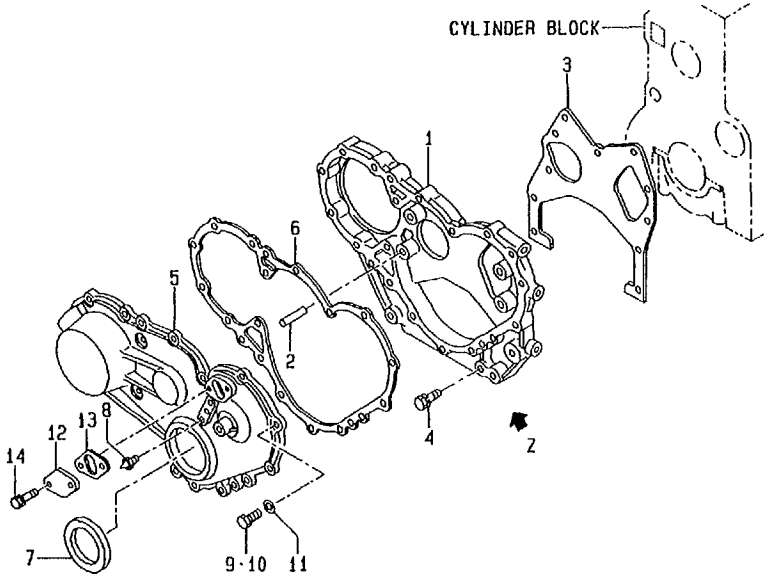

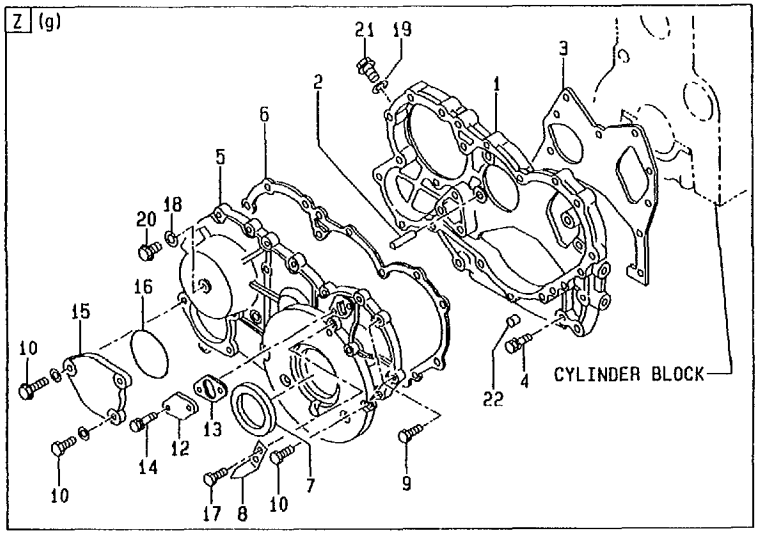

No.	Part No.	Description	Req'd	Remarks · Serial No.
9	Z-0-2868-0825-0	BOLT	7	A,B 1997.5-
-	Z-0-2868-0825-0	BOLT	7	C,D,E,F,H,J,K
-	Z-0-2868-0825-0	BOLT	8	G
10	Z-5-09000-084-1	BOLT	5	A,B -1997.4
-	Z-0-2808-0850-0	BOLT	5	A,B 1997.5-
-	Z-0-2808-0850-0	BOLT	5	C,D,E,F,G,H,J,K
11	Z-9-0916-0508-0	WASHER	5	A,B -1997.4
12	Z-5-11321-009-0	COVER	2	
13	Z-8-97027-601-1	PACKING	2	
14	Z-0-5004-0614-0	BOLT	4	A,B -1997.4
-	Z-0-2808-0612-0	BOLT	4	A,B 1997.5-
-	Z-0-2808-0612-0	BOLT	4	C,D,E,F,G,H,J,K
15	Z-5-11321-095-4	COVER	1	G
16	Z-1-09623-283-0	O-RING	1	G
17	Z-0-5004-0612-0	BOLT	2	G
18	Z-9-0957-1410-0	GASKET	1	G
19	Z-9-0957-1416-0	PACKING	1	G
20	Z-1-09009-119-0	PLUG	1	G
21	Z-1-09604-074-0	PLUG	1	G
22	Z-9-11229-058-1	DOWEL	1	G

D-2 FLYWHEEL HOUSING
(EZA61250)

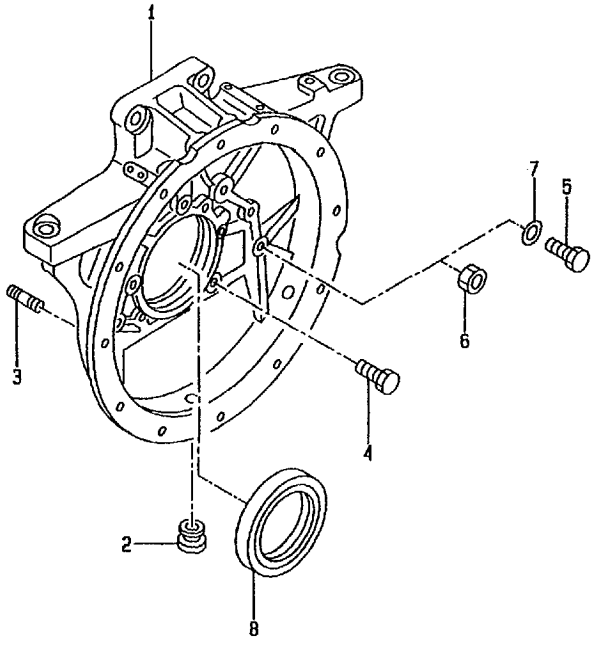

A: A-6BG1QC
B: A-6BG1TQC
C: A-6BG1QC02
D: A-6BG1QC03
E: A-6BG1QC05
F: A-6BG1QC06
G: A-6BG1QC07
H: A-6BG1QC08
J: A-6BG1QC09
K: A-6BG1QC05S

No.	Part No.	Description	Req'd	Remarks • Serial No.
1	Z-1-11341-433-2	HOUSING,FLYWHEEL	1	A,B,C,D,J
-	Z-8-94364-869-2	HOUSING,FLYWHEEL	1	E,F,G,H,K
2	Z-5-09333-035-0	GROMMET	1	A,B
3	Z-9-9441-1235-0	STUD	3	
4	Z-0-5004-0825-0	BOLT	7	
5	Z-9-9106-6450-0	BOLT	5	A,B -1997.1
-	Z-0-2889-1445-0	BOLT	5	A,B 1997.2-
-	Z-0-2889-1445-0	BOLT	5	C,D,E,F,G,H,J,K
-	Z-9-9106-6465-0	BOLT	2	A,B -1997.1
-	Z-0-2889-1460-0	BOLT	2	A,B 1997.2-
-	Z-0-2889-1460-0	BOLT	2	C,D,E,F,G,H,J,K
6	Z-9-9911-0414-0	NUT	1	A,B -1997.3
-	Z-0-9116-0214-0	NUT	1	A,B 1997.4-
-	Z-0-9116-0214-0	NUT	1	C,D,E,F,G,H,J,K
7	Z-9-09651-069-0	WASHER	8	A,B -1997.1
K1	Z-1-87811-031-4	KIT,REPAIR	1	A ENGINE OVERHAUL INC.8 & etc.
K2	Z-1-87811-223-2	KIT,REPAIR	1	B ENGINE OVERHAUL INC.8 & etc.
K3	Z-1-87811-628-2	KIT,REPAIR	1	C,D,E,F,H,J,K ENGINE OVERHAUL INC.8 & etc.
K4	Z-1-87811-887-0	KIT,REPAIR	1	G ENGINE OVERHAUL INC.8 & etc.
8	Z-1-09625-439-1	* SEAL,OIL	1	A,B,C,D,E,F,H,J,K
-	Z-1-09625-469-0	* SEAL,OIL	1	G

D-4 OIL PAN
(EZA61260)

A: A-6BG1QC
B: A-6BG1TQC
C: A-6BG1QC02
D: A-6BG1QC03
E: A-6BG1QC05
F: A-6BG1QC06
G: A-6BG1QC07
H: A-6BG1QC08
J: A-6BG1QC09
K: A-6BG1QC05S

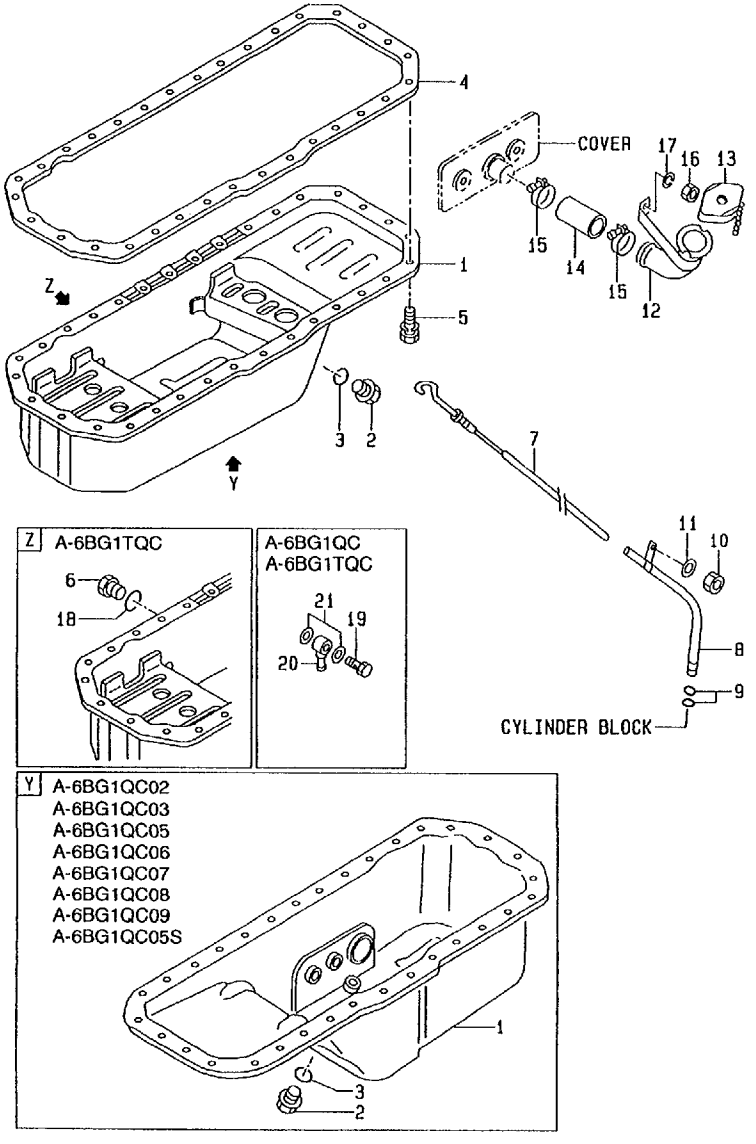

No.	Part No.	Description	Req'd	Remarks • Serial No.
1	Z-1-11360-439-2	PAN	1	A,B INC.2,3
-	Z-5-11360-377-1	PAN	1	C,D,E,F,G,H,J,K INC.2,3
2	Z-1-09604-022-0	PLUG	1	A,B
-	Z-9-09662-012-0	PLUG	1	C,D,E,F,G,H,J,K
K1	Z-1-87811-031-4	KIT,REPAIR	1	A ENGINE OVERHAUL INC.3,4 & etc.
K2	Z-1-87811-223-2	KIT,REPAIR	1	B ENGINE OVERHAUL INC.3,4 & etc.
K3	Z-1-87811-628-2	KIT,REPAIR	1	C,D,E,F,H,J,K ENGINE OVERHAUL INC.3,4 & etc.
K4	Z-1-87811-887-0	KIT,REPAIR	1	G ENGINE OVERHAUL INC.3,4 & etc.
3	Z-1-09623-179-0	* O-RING	1	A,B
-	Z-1-09623-057-0	* O-RING	1	C,D,E,F,G,H,J,K
4	Z-1-11367-100-0	* PACKING	1	
5	Z-0-5004-0818-0	BOLT	32	
6	Z-8-94152-613-0	PLUG	2	B
7	Z-1-11760-280-2	GAUGE,LEVEL	1	A,B OIL
-	Z-1-11760-378-0	GAUGE,OIL	1	C,D,E,F,G,H,J,K LEVEL
8	Z-1-11766-274-1	TUBE	1	A,B INC.9
-	Z-1-11766-402-0	GUIDE	1	C,D,E,F,G,H,J,K INC.9
9	Z-5-09623-002-0	O-RING	2	
10	Z-9-0911-0508-0	NUT	2	A,B
-	Z-9-0911-0508-0	NUT	1	C,D,E,F,G,H,J,K
11	Z-9-0916-0508-0	WASHER	1	A,B
-	Z-9-0915-0508-0	WASHER	1	C,D,E,F,G,H,J,K
12	Z-1-11740-204-1	FILTER	1	A,B INC.13 -1996.8

D-5 OIL PAN
(EZA61260)

A: A-6BG1QC
B: A-6BG1TQC
C: A-6BG1QC02
D: A-6BG1QC03
E: A-6BG1QC05
F: A-6BG1QC06
G: A-6BG1QC07
H: A-6BG1QC08
J: A-6BG1QC09
K: A-6BG1QC05S

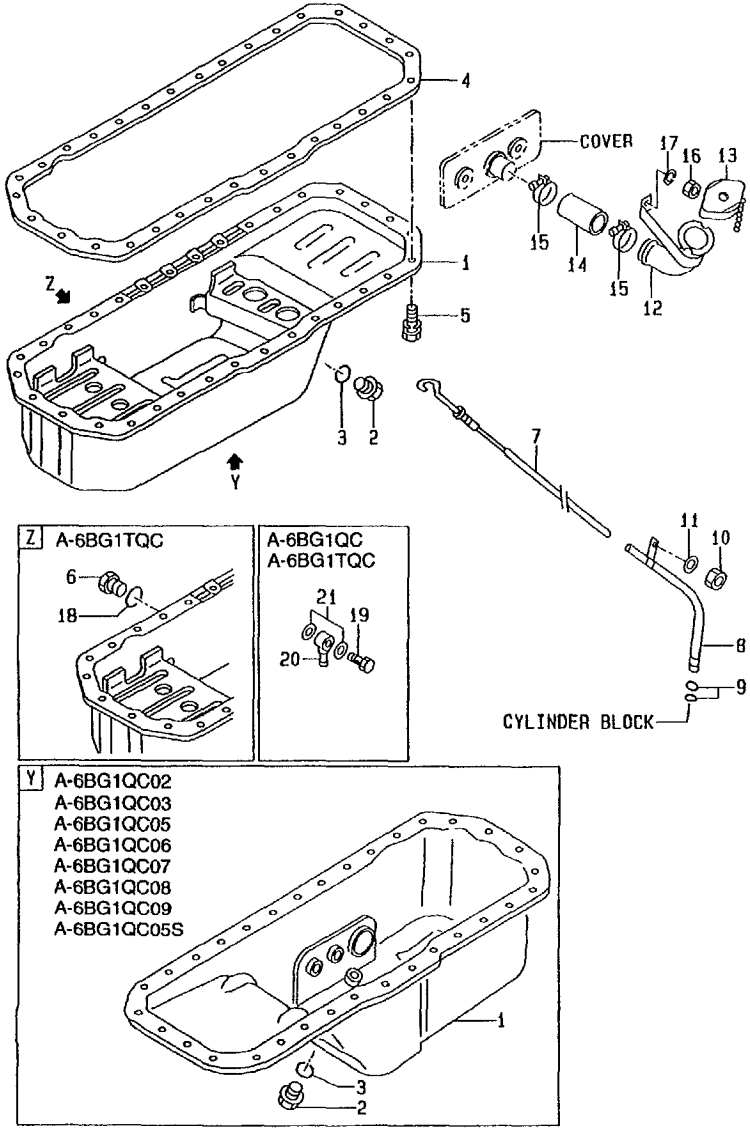

No.	Part No.	Description	Req'd	Remarks • Serial No.
12	Z-1-11740-174-1	FILLER,OIL	1	A,B INC.13 1996.9-
-	Z-1-11740-201-1	FILLER,OIL	1	C,D,E,F,G,H,J,K INC.13
13	Z-1-11750-024-1	CAP	1	A,B OIL FILLER -1996.8
-	Z-1-11750-012-0	CAP	1	A,B OIL FILLER 1996.9-
-	Z-1-11750-024-1	CAP	1	C,D,E,F,G OIL FILLER
14	Z-9-09912-976-0	HOSE	1	
15	Z-9-09915-553-1	CLIP	2	
16	Z-9-0911-0408-0	NUT	1	
17	Z-9-0915-0508-0	WASHER	1	
18	Z-1-09630-085-0	PACKING	2	B
19	Z-1-19191-914-0	JOINT	1	A,B DRAIN
20	Z-1-09675-132-0	BOLT	1	A,B EYE
21	Z-9-0957-1424-0	PACKING	2	A,B

E-2 CYLINDER HEAD
(EZA61310)

A: A-6BG1QC
B: A-6BG1TQC
C: A-6BG1QC02
D: A-6BG1QC03
E: A-6BG1QC05
F: A-6BG1QC06
G: A-6BG1QC07
H: A-6BG1QC08
J: A-6BG1QC09
K: A-6BG1QC05S

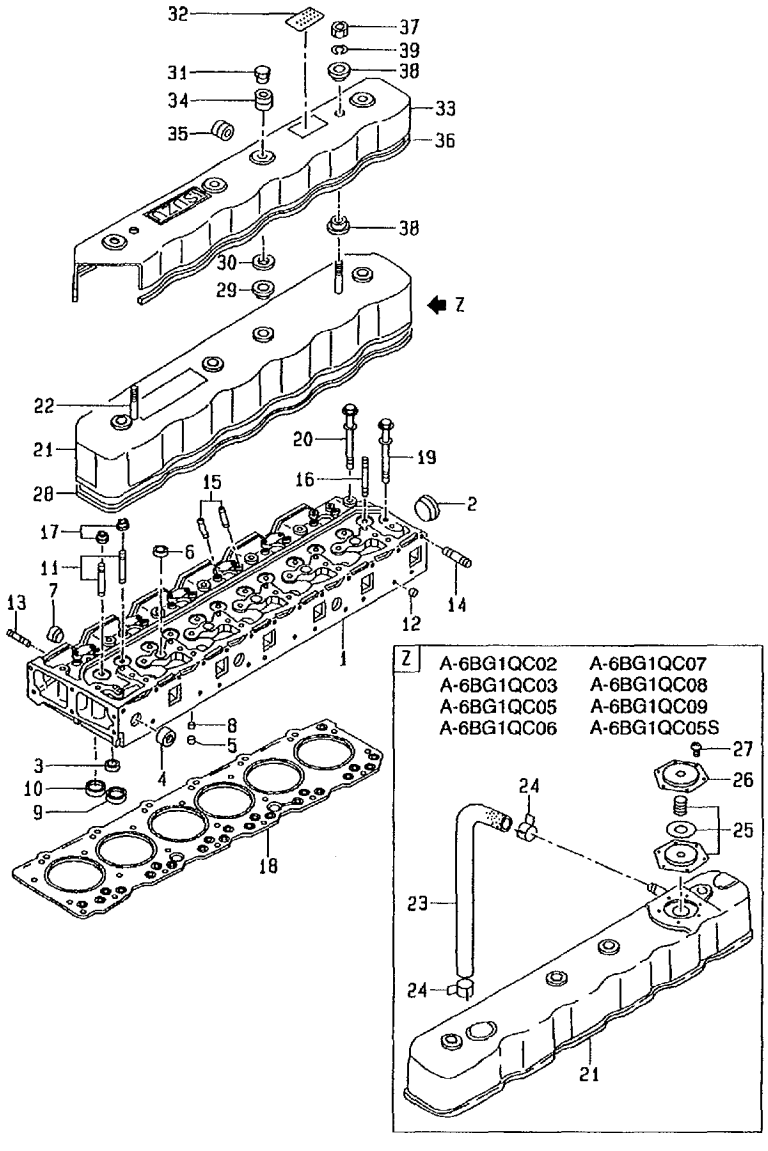

No.	Part No.	Description	Req'd	Remarks · Serial No.
1	Z-1-11110-614-2	HEAD,CYL	1	A,C,D,E,F,G,H,J,K INC.2-11
-	Z-1-11110-601-1	HEAD,CYL	1	B INC.2-11 -1996.9
-	Z-1-11110-842-0	HEAD,CYL	1	B INC.2-11 1996.10-
2	Z-1-09600-005-1	CUP	1	SEALING
3	Z-9-11129-128-0	CUP	3	SEALING
4	Z-5-11219-015-0	CUP	3	SEALING
5	Z-5-09600-013-0	CUP	6	SEALING
6	Z-1-09600-016-0	CUP	5	SEALING
7	Z-1-09600-016-0	CUP	6	SEALING
8	Z-9-09660-034-0	PLUG	6	
9	Z-1-11715-054-0	INSERT	6	VALVE,SEAT
10	Z-1-11711-043-0	SEAT,VALVE	6	INSERT
11	Z-5-11721-001-0	VALVE,GUIDE	12	
12	Z-9-11129-601-0	CUP	5	SEALING
13	Z-9-0411-0825-0	STUD	3	
14	Z-9-09630-026-0	STUD	12	A,C,D,E,F,G,H,J,K
-	Z-9-09630-026-0	STUD	11	B
-	Z-9-09830-078-0	STUD	1	B
15	Z-1-09300-018-0	STUD	12	
16	Z-9-09830-163-0	STUD	4	
K1	Z-1-87811-031-4	KIT,REPAIR	1	A ENGINE OVERHAUL INC.17,18,28,29 & etc.
K2	Z-1-87811-223-2	KIT,REPAIR	1	B ENGINE OVERHAUL INC.17,18,28,29 & etc.
K3	Z-1-87811-628-2	KIT,REPAIR	1	C,D,E,F,H,J,K ENGINE OVERHAUL INC.17,18,28,29 & etc.
K4	Z-1-87811-887-0	KIT,REPAIR	1	G ENGINE OVERHAUL INC.17,18,28,29 & etc.
K5	Z-1-87811-242-0	KIT,REPAIR	1	A,B ENGINE TOP OVERHAUL INC.17,18,28 & etc.

E-3 CYLINDER HEAD
(EZA61310)

A: A-6BG1QC
B: A-6BG1TQC
C: A-6BG1QC02
D: A-6BG1QC03
E: A-6BG1QC05
F: A-6BG1QC06
G: A-6BG1QC07
H: A-6BG1QC08
J: A-6BG1QC09
K: A-6BG1QC05S

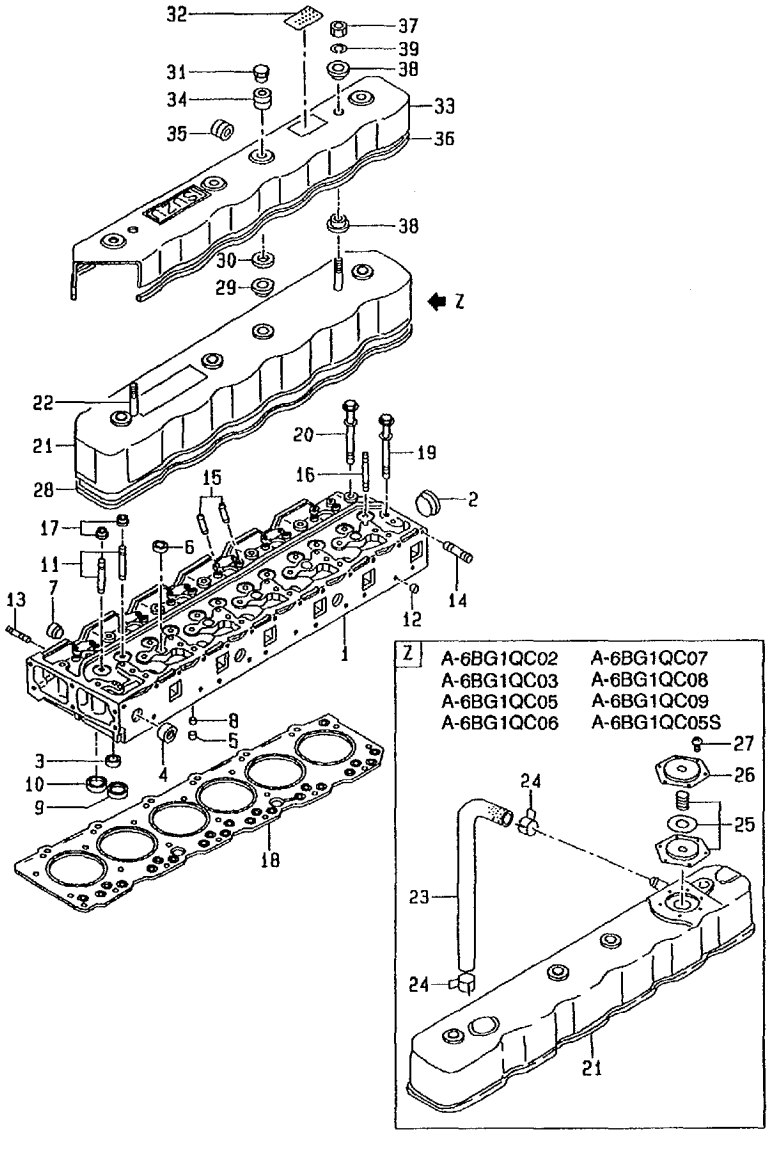

No.	Part No.	Description	Req'd	Remarks · Serial No.
K6	Z-1-87810-945-1	KIT,REPAIR	1	C,D,E,F,G,H,J,K
				ENGINE TOP OVERHAUL
				INC.17,18,28 & etc.
17	Z-1-12569-015-0	* SEAL	12	VALVE GUIDE
18	Z-1-11141-196-0	* GASKET	1	
19	Z-1-09070-101-0	BOLT	20	
20	Z-1-09070-100-0	BOLT	6	
21	Z-1-11180-132-2	COVER	1	A,B
				CYLINDER HEAD INC.22
-	Z-1-11180-350-0	COVER	1	C,D,E,F,G,H,J,K
				CYLINDER HEAD INC.25-27
22	Z-9-0411-0825-0	STUD	2	A,B
23	Z-1-09360-752-0	HOSE	1	C,D,E,F,G,H,J,K
24	Z-1-09707-084-1	CLIP	2	C,D,E,F,G,H,J,K
25	Z-8-94110-111-0	DIAPHRAGM	1	C,D,E,F,G,H,J,K
26	Z-1-14362-002-0	COVER	1	C,D,E,F,G,H,J,K
27	Z-9-9349-0510-0	SCREW	6	C,D,E,F,G,H,J,K
28	Z-1-11173-059-0	* GASKET	1	A,B
-	Z-1-11173-055-0	* PACKING	1	C,D,E,F,G,H,J,K
29	Z-9-11179-030-0	* PACKING	4	
30	Z-9-11179-105-0	WASHER	4	
31	Z-8-94340-192-0	NUT	4	
33	Z-5-19381-001-3	COVER	1	A,B
34	Z-1-19389-004-0	GROMMET	4	A,B
35	Z-9-0957-5208-0	GROMMET	1	A,B
36	Z-1-19387-007-0	SEAL,RUBBER	1	A,B
37	Z-9-0911-0408-0	NUT	2	A,B
38	Z-1-09337-027-0	RUBBER	4	A,B
				MOUNT
39	Z-9-0915-0508-0	WASHER	2	A,B

E-5 VALVE MECHANISM
(EZA61320)

A: A-6BG1QC
B: A-6BG1TQC
C: A-6BG1QC02
D: A-6BG1QC03
E: A-6BG1QC05
F: A-6BG1QC06
G: A-6BG1QC07
H: A-6BG1QC08
J: A-6BG1QC09
K: A-6BG1QC05S

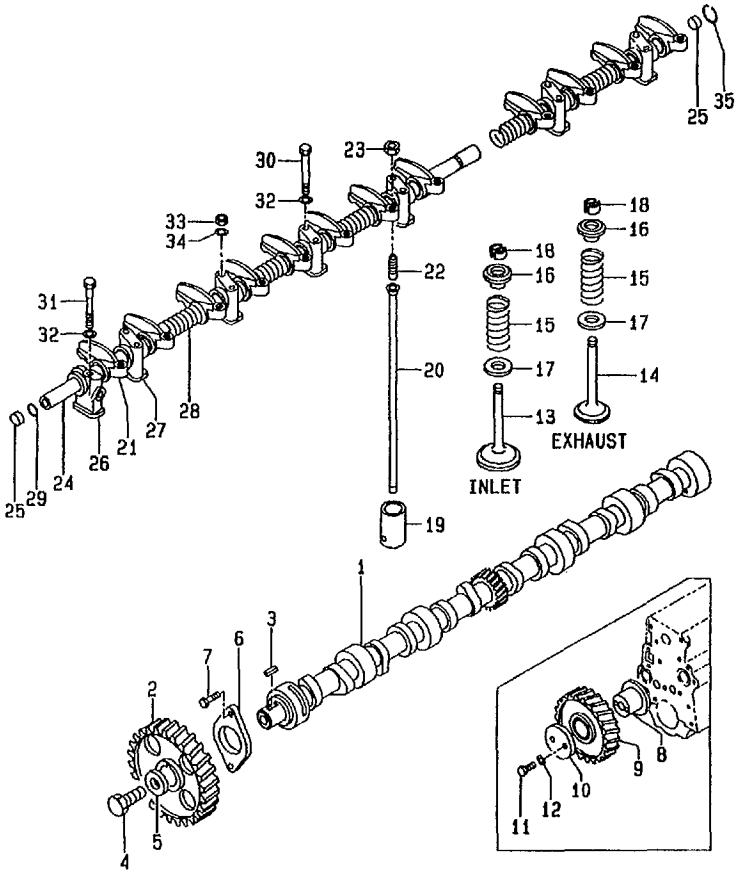

No.	Part No.	Description	Req'd	Remarks・Serial No.
1	Z-1-12514-005-0	SHAFT	1	CAM,TIMING
2	Z-1-12522-016-2	GEAR	1	CAMSHAFT
3	Z-9-0803-0713-0	KEY	1	
4	Z-9-9206-1428-0	BOLT	1	
5	Z-9-09851-850-3	WASHER	1	
6	Z-9-11681-015-0	PLATE	1	THRUST
7	Z-0-5004-0825-0	BOLT	2	
8	Z-9-12531-030-0	SHAFT	1	IDLE
9	Z-1-12523-057-3	GEAR	1	A,B IDLE -1996.4
-	Z-8-94133-937-3	GEAR	1	A,B IDLE 1996.5-
-	Z-8-94133-937-3	GEAR	1	C,D,E,F,G,H,J,K IDLE
10	Z-5-12535-001-1	COLLAR	1	
11	Z-0-1081-1055-0	BOLT	2	
12	Z-9-0915-0510-0	WASHER	2	
13	Z-1-12551-083-0	VALVE	6	INLET
14	Z-1-12552-025-1	VALVE,EXHAUST	6	
15	Z-1-12561-099-0	SPRING	12	VALVE
16	Z-8-94114-579-0	SEAT	12	SPRING,UPPER
17	Z-5-12563-001-0	SEAT	12	SPRING,LOWER
18	Z-5-12565-006-0	COLLAR	24	
19	Z-5-12571-003-2	TAPEET	12	
20	Z-1-12575-036-0	ROD	12	PUSH
21	Z-1-12611-118-0	ARM	12	ROCKER
22	Z-9-12616-042-0	SCREW	12	
23	Z-9-0911-1508-0	NUT	12	
24	Z-1-12621-062-1	SHAFT	1	
25	Z-9-12626-005-0	PLUG	2	
26	Z-5-12628-012-0	BRACKET,ROCKER	1	
27	Z-9-12628-105-0	BRACKET	6	
28	Z-1-09580-335-0	SPRING	5	
29	Z-5-09623-060-0	O-RING	1	
30	Z-1-09000-567-0	BOLT	8	
31	Z-9-09602-148-0	BOLT	1	
32	Z-9-09851-430-0	WASHER	9	
33	Z-1-09400-116-0	NUT	4	

E-6 VALVE MECHANISM
(EZA61320)

A: A-6BG1QC
B: A-6BG1TQC
C: A-6BG1QC02
D: A-6BG1QC03
E: A-6BG1QC05
F: A-6BG1QC06
G: A-6BG1QC07
H: A-6BG1QC08
J: A-6BG1QC09
K: A-6BG1QC05S

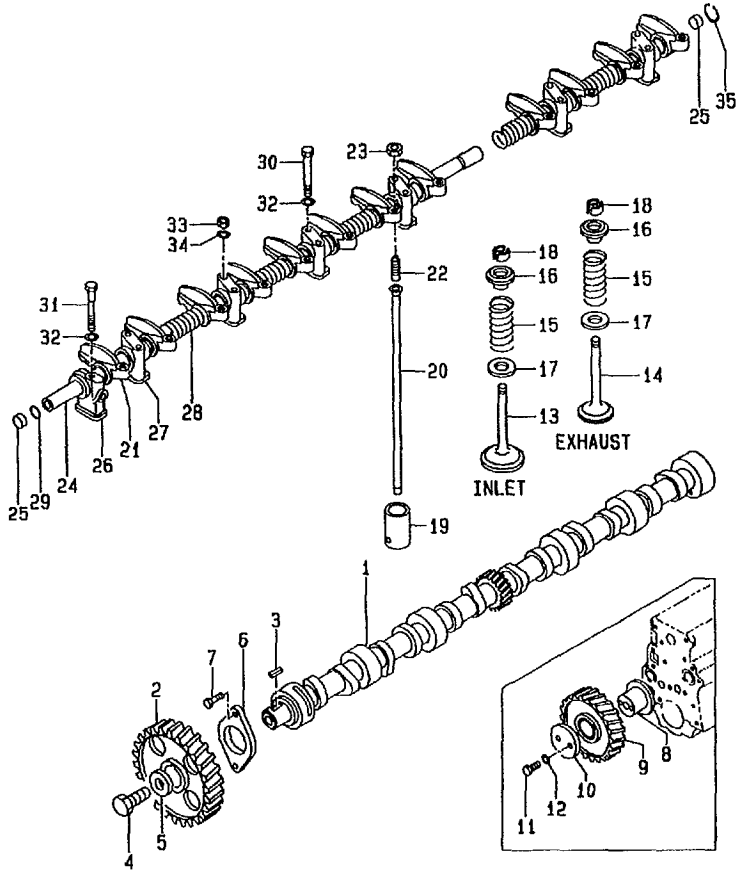

No.	Part No.	Description	Req'd	Remarks • Serial No.
34	Z-9-09851-430-0	WASHER	4	
35	Z-9-0918-0019-0	RING,SNAP	1	

F-2 AIR INTAKE & EXHAUST SYSTEM (FOR A)
(EZA61410)

A: A-6BG1QC
B: A-6BG1TQC
C: A-6BG1QC02
D: A-6BG1QC03
E: A-6BG1QC05
F: A-6BG1QC06
G: A-6BG1QC07
H: A-6BG1QC08
J: A-6BG1QC09
K: A-6BG1QC05S

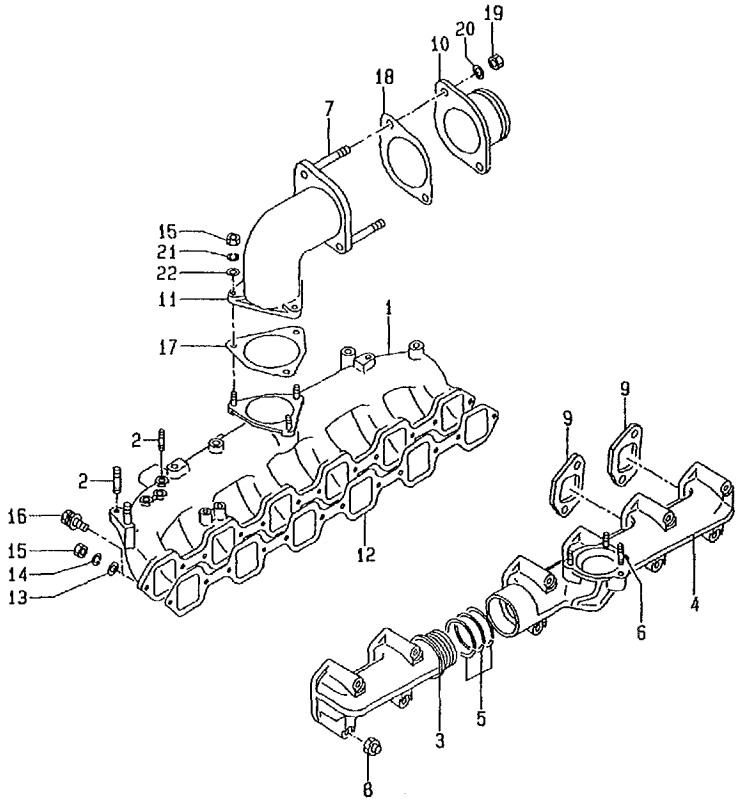

No.	Part No.	Description	Req'd	Remarks・Serial No.
1	Z-1-14112-209-3	MANIFOLD	1	A
				INLET
2	Z-9-0441-1028-0	STUD	2	A
-	Z-5-09300-029-0	STUD	1	A
3	Z-9-14141-276-1	MANIFOLD,EXHAUST	1	A
4	Z-1-14141-690-0	MANIFOLD	1	A
				EXHAUST
5	Z-9-14149-653-0	RING,SEAL	3	A
6	Z-9-0441-1030-0	STUD	3	A
7	Z-9-0441-1025-0	STUD	2	A
8	Z-9-09844-565-0	NUT	12	A
K1	Z-1-87811-031-4	KIT,REPAIR	1	A
				ENGINE OVERHAUL
				INC.9,12,17 & etc.
K2	Z-1-87811-242-0	KIT,REPAIR	1	A
				ENGINE TOP OVERHAUL
				INC.9,12 & etc.
9	Z-1-14145-114-0	* GASKET	6	A
10	Z-1-14112-315-0	PIPE	1	A
				INLET
11	Z-5-14111-110-1	PIPE,INLET	1	A
12	Z-1-14115-061-0	* PACKING	1	A
13	Z-9-0916-0508-0	WASHER	3	A
14	Z-9-0915-0508-0	WASHER	3	A
15	Z-9-0911-0408-0	NUT	6	A
16	Z-0-5014-0828-0	BOLT	9	A
17	Z-1-14115-059-0	* PACKING	1	A
18	Z-1-09637-061-0	PACKING	1	A
19	Z-9-0911-0410-0	NUT	2	A
20	Z-9-0915-0510-0	WASHER	2	A
21	Z-9-0915-0508-0	WASHER	3	A
22	Z-9-0916-0508-0	WASHER	3	A

F-4 AIR INTAKE & EXHAUST SYSTEM (FOR B)
(EZA61420)

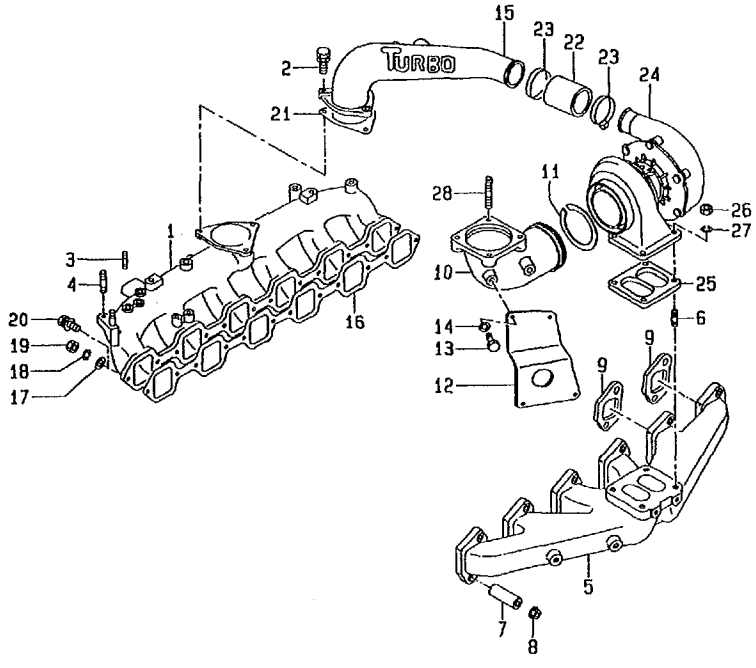

A: A-6BG1QC
B: A-6BG1TQC
C: A-6BG1QC02
D: A-6BG1QC03
E: A-6BG1QC05
F: A-6BG1QC06
G: A-6BG1QC07
H: A-6BG1QC08
J: A-6BG1QC09
K: A-6BG1QC05S

No.	Part No.	Description	Req'd	Remarks · Serial No.
1	Z-1-14112-209-3	MANIFOLD	1	B
				INLET
2	Z-0-5014-0830-0	BOLT	3	B
				-1997.7
-	Z-0-2868-0830-0	BOLT	3	B
				1997.8-
3	Z-5-09300-029-0	STUD	1	B
4	Z-9-0441-1028-0	STUD	2	B
5	Z-1-14141-692-1	MANIFOLD	1	B
				EXHAUST
				-1996.8
-	Z-1-14141-791-2	MANIFOLD,EXHAUST	1	B
				1996.9-
6	Z-9-0473-1025-0	STUD	4	B
7	Z-1-14149-170-1	TUBE,DISTANCE	12	B
8	Z-1-09440-040-1	NUT	12	B
K1	Z-1-87811-223-2	KIT,REPAIR	1	B
				ENGINE OVERHAUL
				INC.9,16,21,25 & etc.
K2	Z-1-87811-242-0	KIT,REPAIR	1	B
				ENGINE TOP OVERHAUL
				INC.9,16 & etc.
9	Z-1-14145-114-0	* GASKET	6	B
10	Z-1-14144-605-0	ADAPTER	1	B
11	Z-1-14149-084-1	SEAL	2	B
				RING
12	Z-1-14149-212-0	BRACKET	1	B
13	Z-0-2080-1022-0	BOLT	2	B
				-1997.7
-	Z-0-2808-1020-0	BOLT	2	B
				1997.8-
-	Z-0-1080-6070-0	BOLT	2	B
14	Z-9-0916-4010-0	WASHER	4	B
15	Z-1-14112-622-1	PIPE,INLET	1	B
16	Z-1-14115-061-0	* PACKING	1	B
17	Z-9-0916-0508-0	WASHER	3	B
18	Z-9-0915-0508-0	WASHER	3	B
19	Z-9-0911-0408-0	NUT	3	B
20	Z-0-5014-0828-0	BOLT	9	B
21	Z-1-14115-059-0	* PACKING	1	B

F-5 AIR INTAKE & EXHAUST SYSTEM (FOR B)
(EZA61420)

A: A-6BG1QC
B: A-6BG1TQC
C: A-6BG1QC02
D: A-6BG1QC03
E: A-6BG1QC05
F: A-6BG1QC06
G: A-6BG1QC07
H: A-6BG1QC08
J: A-6BG1QC09
K: A-6BG1QC05S

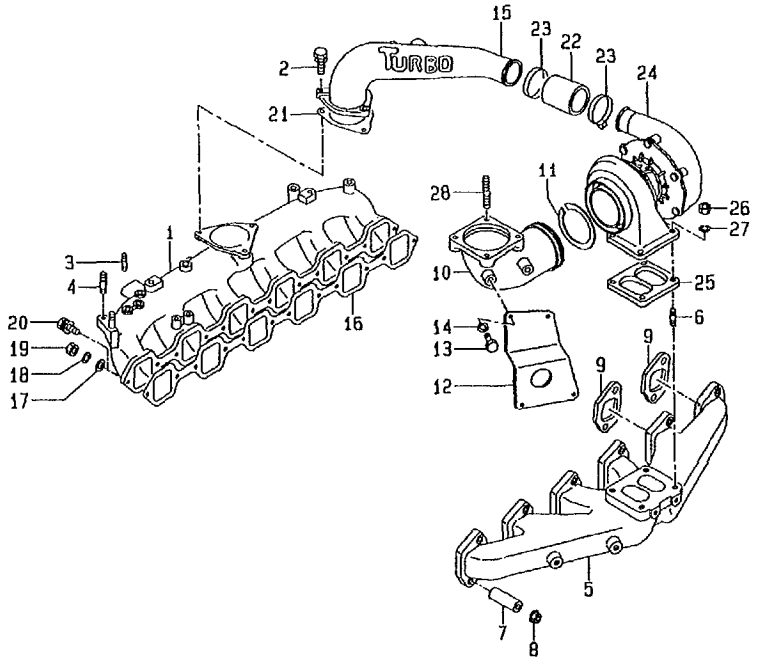

No.	Part No.	Description	Req'd	Remarks · Serial No.
22	Z-1-09360-782-0	HOSE	1	B
23	Z-8-94316-991-0	CLIP	2	B
24	Z-1-14400-333-2	CHARGER,TURBO	1	B
				SEE LOC. F-9
25	Z-1-14145-140-0	* GASKET	1	B
26	Z-9-09842-007-0	NUT	3	B
-	Z-1-09420-005-0	NUT	1	B
27	Z-1-09503-033-1	WASHER	4	B
28	Z-9-0441-1030-0	STUD	4	B

F-7 AIR INTAKE & EXHAUST SYSTEM (FOR C, D, E, F, G, H, J, K)
(EZA61430)

A: A-6BG1QC
B: A-6BG1TQC
C: A-6BG1QC02
D: A-6BG1QC03
E: A-6BG1QC05
F: A-6BG1QC06
G: A-6BG1QC07
H: A-6BG1QC08
J: A-6BG1QC09
K: A-6BG1QC05S

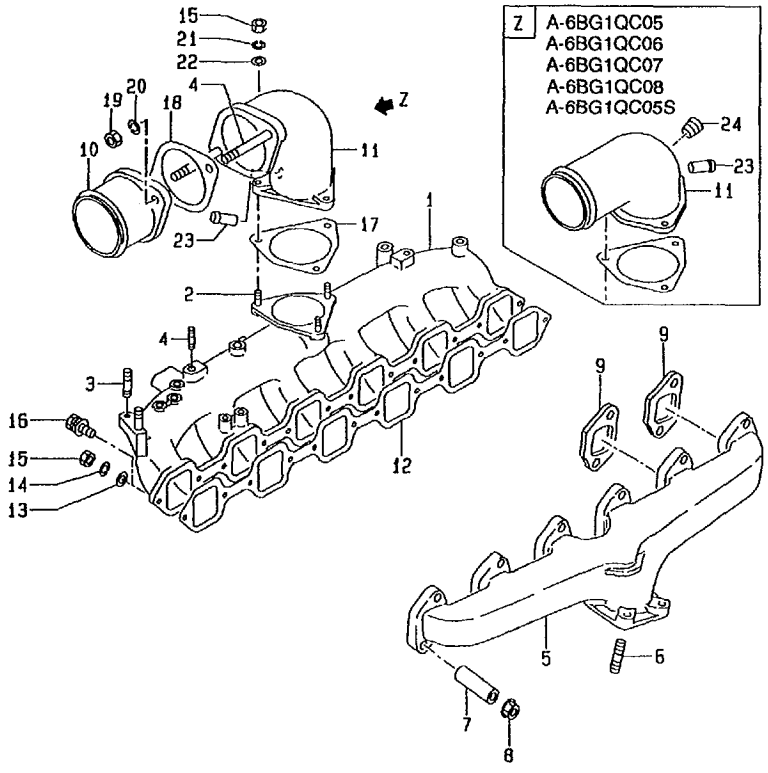

No.	Part No.	Description	Req'd	Remarks · Serial No.
1	Z-5-14111-243-4	MANIFOLD	1	C,D,E,F,G,H,J,K INLET
2	Z-9-0401-0828-0	STUD	3	C,D,E,F,G,H,J,K
3	Z-9-0441-1028-0	STUD	2	C,D,E,F,G,H,J,K
4	Z-9-0441-1025-0	STUD	2	C,D,J
5	Z-1-14141-901-0	MANIFOLD,EXHAUST	1	C,D,E,F,G,H,J,K
6	Z-9-0441-1030-0	STUD	4	C,D,E,F,G,H,J,K
7	Z-1-14149-170-1	TUBE,DISTANCE	12	C,D,E,F,G,H,J,K
8	Z-1-09440-040-1	NUT	12	C,D,E,F,G,H,J,K
K1	Z-1-87811-628-2	KIT,REPAIR	1	C,D,E,F,H,J,K ENGINE OVERHAUL INC.9,12,17 & etc.
K2	Z-1-87811-887-0	KIT,REPAIR	1	G ENGINE OVERHAUL INC.9,12,17 & etc.
K3	Z-1-87810-945-1	KIT,REPAIR	1	C,D,E,F,G,H,J,K ENGINE TOP OVERHAUL INC.9,12 & etc.
9	Z-1-14145-114-0	* GASKET	6	C,D,E,F,G,H,J,K
10	Z-1-14112-315-0	PIPE	1	C,D,J INLET
11	Z-1-14110-512-0	PIPE	1	C,D,J INLET INC.4,23
-	Z-1-14110-507-1	PIPE	1	E,F,G,H,K INLET INC.23,24
12	Z-1-14115-061-0	* PACKING	1	C,D,E,F,G,H,J,K
13	Z-9-0916-0508-0	WASHER	3	C,D,E,F,G,H,J,K
14	Z-9-0915-0508-0	WASHER	3	C,D,E,F,G,H,J,K
15	Z-9-0911-0408-0	NUT	6	C,D,E,F,G,H,J,K
16	Z-0-5014-0828-0	BOLT	9	C,D,E,F,G,H,J,K
17	Z-1-14115-059-0	* PACKING	1	C,D,E,F,G,H,J,K
18	Z-1-09637-061-0	PACKING	1	C,D,J
19	Z-9-0911-0410-0	NUT	2	C,D,J
20	Z-9-0915-0510-0	WASHER	2	C,D,J
21	Z-9-0915-0508-0	WASHER	3	C,D,E,F,G,H,J,K
22	Z-8-09160-508-0	WASHER	3	C,D,E,F,G,H,J,K
23	Z-8-94164-027-0	PIPE	1	C,D,E,F,G,H,J,K
24	Z-5-09605-008-0	PLUG	1	E,F,G,H,K

F-9 TURBO CHARGER (FOR B)
(EZA61440)

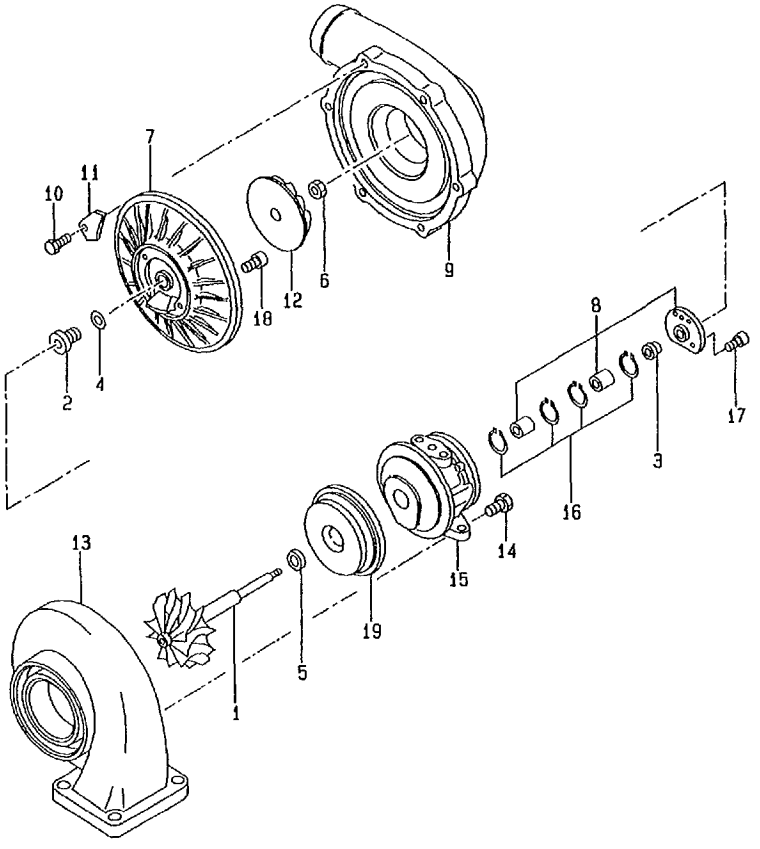

A: A-6BG1QC
B: A-6BG1TQC
C: A-6BG1QC02
D: A-6BG1QC03
E: A-6BG1QC05
F: A-6BG1QC06
G: A-6BG1QC07
H: A-6BG1QC08
J: A-6BG1QC09
K: A-6BG1QC05S

No.	Part No.	Description	Req'd	Remarks · Serial No.
A	Z-1-14400-333-2	CHARGER,TURBO	1	B
				INC.1-19
K	Z-1-14453-083-0	KIT,REPAIR	1	B
				INC.4,5,8,16-18
1	Z-1-14450-053-0	SHAFT,TURBINE	1	B
2	Z-1-14455-041-0	THROWER,OIL	1	B
3	Z-1-14453-084-0	BUSHING	1	B
4	Z-1-14453-085-0	* RING,SEAL	1	B
5	Z-1-14453-086-0	* RING,SEAL	1	B
6	Z-1-09400-041-0	NUT,LOCK	1	B
7	Z-1-14425-029-0	PLATE	1	B
				SEAL
8	NO PART NO.	* BRG	1	B
				SET
9	Z-1-14414-093-0	HOUSING	1	B
				BLOWER
10	Z-1-14379-088-0	BOLT	6	B
11	Z-1-14421-020-0	PLATE	6	B
12	Z-1-14451-057-0	IMPELLER	1	B
13	Z-1-14414-095-0	HOUSING	1	B
				TURBINE
14	Z-1-09100-034-0	BOLT	4	B
15	Z-1-14414-094-0	HOUSING,BRG	1	B
16	Z-1-14455-042-0	* RING	3	B
				RETAINING
17	Z-1-09100-033-0	* SCREW	3	B
18	Z-1-09100-032-0	* SCREW	4	B
19	Z-1-14421-024-0	PROTECTOR	1	B
				HEAT

F-11 MUFFLER (FOR A, B)
(EZA61450)

A: A-6BG1QC
B: A-6BG1TQC
C: A-6BG1QC02
D: A-6BG1QC03
E: A-6BG1QC05
F: A-6BG1QC06
G: A-6BG1QC07
H: A-6BG1QC08
J: A-6BG1QC09
K: A-6BG1QC05S

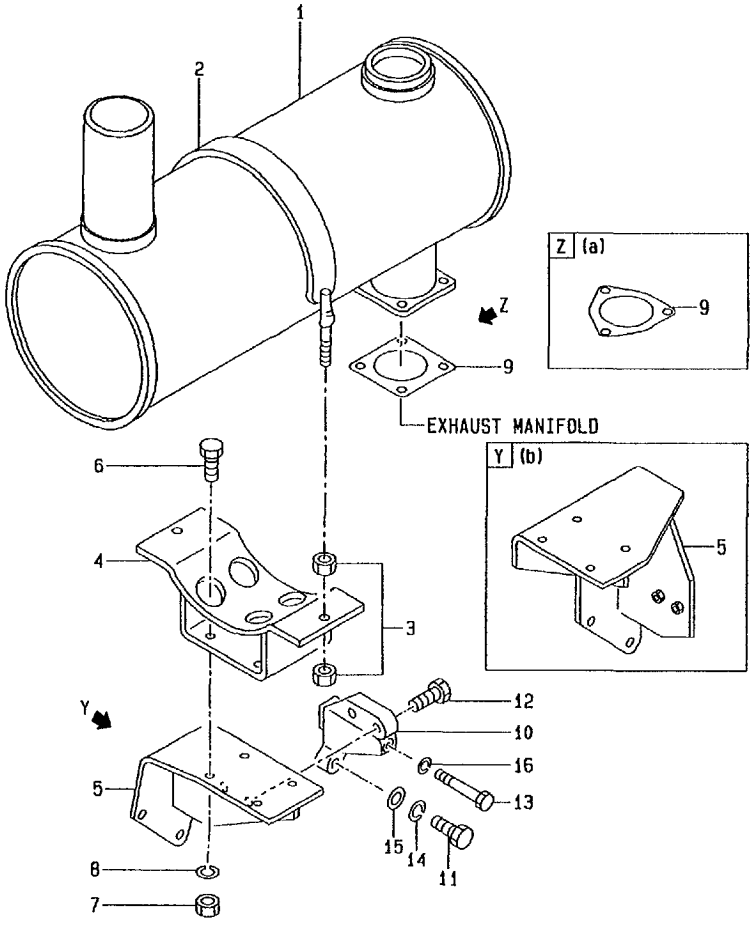

No.	Part No.	Description	Req'd	Remarks · Serial No.
1	Z-1-22140-561-3	MUFFLER	1	A
-	Z-1-22140-560-2	MUFFLER	1	B
2	Z-1-22159-120-0	BAND	1	A,B
3	Z-9-0912-0410-0	NUT	4	A,B
4	Z-1-22151-466-0	BRACKET	1	A,B
5	Z-1-22151-468-4	BRACKET	1	A
-	Z-1-22151-700-1	BRACKET	1	B -1996.6
-	Z-1-22151-740-0	BRACKET	1	B 1996.7-
6	Z-0-5014-1025-0	BOLT	4	A,B -1997.7
-	Z-0-2868-1025-0	BOLT	4	A,B 1997.8-
7	Z-1-09400-027-0	NUT	3	A
-	Z-1-09400-027-0	NUT	4	B
8	Z-1-09500-008-0	WASHER,LOCK	3	A
-	Z-1-09500-008-0	WASHER,LOCK	4	B
9	Z-1-14145-069-0	GASKET	1	A
-	Z-1-14145-091-0	GASKET	1	B
10	Z-1-22151-714-1	+STAY	1	A,B -1996.6
-	Z-1-22151-739-0	STAY	1	A,B 1996.7-
11	Z-0-1080-6455-0	BOLT	1	A,B -1997.7
-	Z-0-2888-1450-0	BOLT	1	A,B 1997.8-
12	Z-0-2868-1040-0	BOLT	2	A,B
13	Z-1-09000-199-1	BOLT	1	A,B -1997.7
-	Z-0-2808-6013-0	BOLT	1	A,B 1997.8-
14	Z-9-0915-0514-0	WASHER	1	A,B -1997.7
15	Z-9-0916-4514-0	WASHER	1	A,B -1997.7
16	Z-9-0915-0510-0	WASHER	1	A,B

G-2 OIL PIPE
(EZA61510)

A: A-6BG1QC
B: A-6BG1TQC
C: A-6BG1QC02
D: A-6BG1QC03
E: A-6BG1QC05
F: A-6BG1QC06
G: A-6BG1QC07
H: A-6BG1QC08
J: A-6BG1QC09
K: A-6BG1QC05S

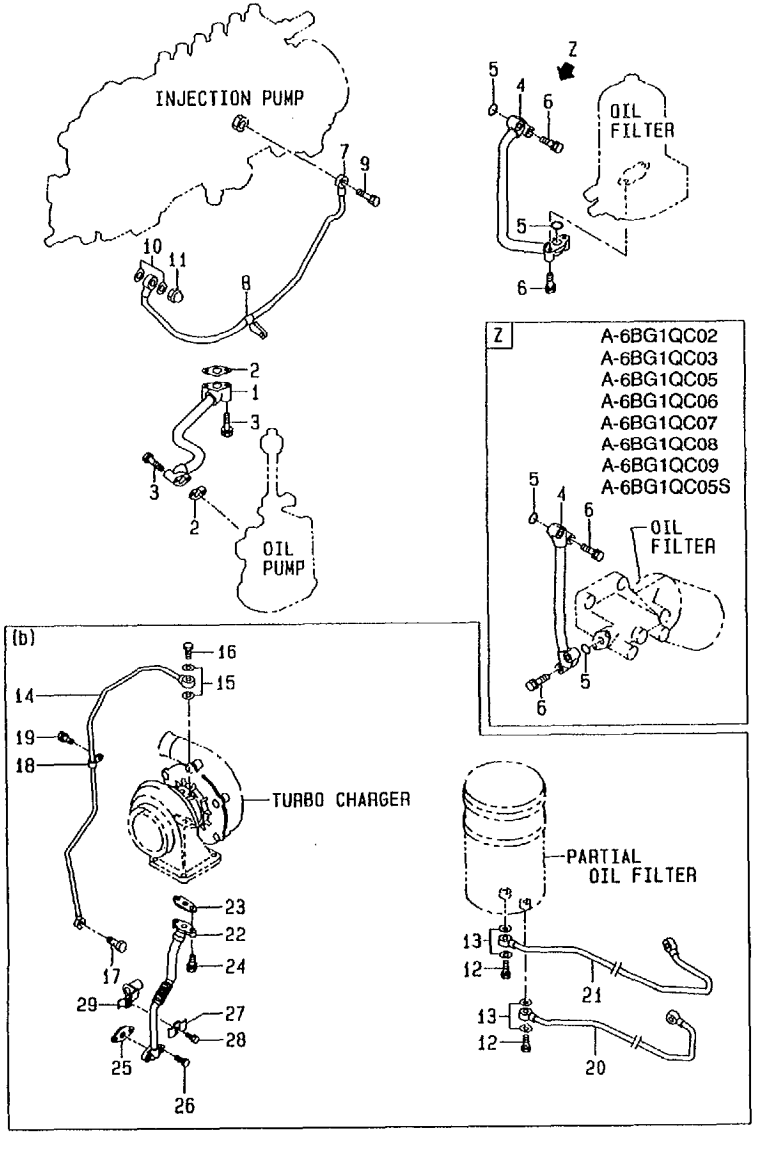

No.	Part No.	Description	Req'd	Remarks • Serial No.
1	Z-1-13311-532-2	PIPE	1	
K1	Z-1-87811-031-4	KIT,REPAIR	1	A ENGINE OVERHAUL INC.2,5,10 & etc.
K2	Z-1-87811-223-2	KIT,REPAIR	1	B ENGINE OVERHAUL INC.2,5,10,15,23,25 & etc.
K3	Z-1-87811-628-2	KIT,REPAIR	1	C,D,E,F,H,J,K ENGINE OVERHAUL INC.2,5,10
K4	Z-1-87811-887-0	KIT,REPAIR	1	G ENGINE OVERHAUL INC.2,5,10 & etc.
2	Z-9-09921-188-0	* PACKING	2	
3	Z-0-5004-0840-0	BOLT	4	A,B -1997.7
-	Z-0-2808-0840-0	BOLT	4	A,B 1997.8-
-	Z-0-2808-0840-0	BOLT	4	C,D,E,F,G,H,J,K
4	Z-5-13311-208-0	PIPE	1	A
-	Z-1-13313-604-1	PIPE	1	B
-	Z-0-13311-119-0	PIPE	1	C,D,E,F,G,H,J,K
5	Z-1-09623-462-0	* O-RING	2	
6	Z-0-5004-0835-0	BOLT	4	
7	Z-5-13311-205-0	PIPE-ASSY	1	A,C,D,E,F,G,H,J,K INC.8
-	Z-1-13313-603-0	PIPE	1	B
8	Z-9-09917-105-1	CLIP	1	A,C,D,E,F,G,H,J,K
9	Z-1-09675-077-0	BOLT	1	A,C,D,E,F,G,H,J,K EYE
10	Z-1-09630-083-0	* PACKING	2	
11	Z-9-09844-022-0	NUT	1	
12	Z-1-09675-086-0	BOLT,EYE	4	B
13	Z-1-09630-085-0	PACKING	8	B
14	Z-1-13313-599-0	PIPE	1	B
15	Z-9-0957-1410-0	* GASKET	2	B
16	Z-8-94107-713-2	BOLT,EYE	1	B
17	Z-1-09675-081-0	BOLT,EYE	1	B
18	Z-5-09704-054-1	CLIP	1	B

G-3 OIL PIPE
(EZA61510)

A: A-6BG1QC
B: A-6BG1TQC
C: A-6BG1QC02
D: A-6BG1QC03
E: A-6BG1QC05
F: A-6BG1QC06
G: A-6BG1QC07
H: A-6BG1QC08
J: A-6BG1QC09
K: A-6BG1QC05S

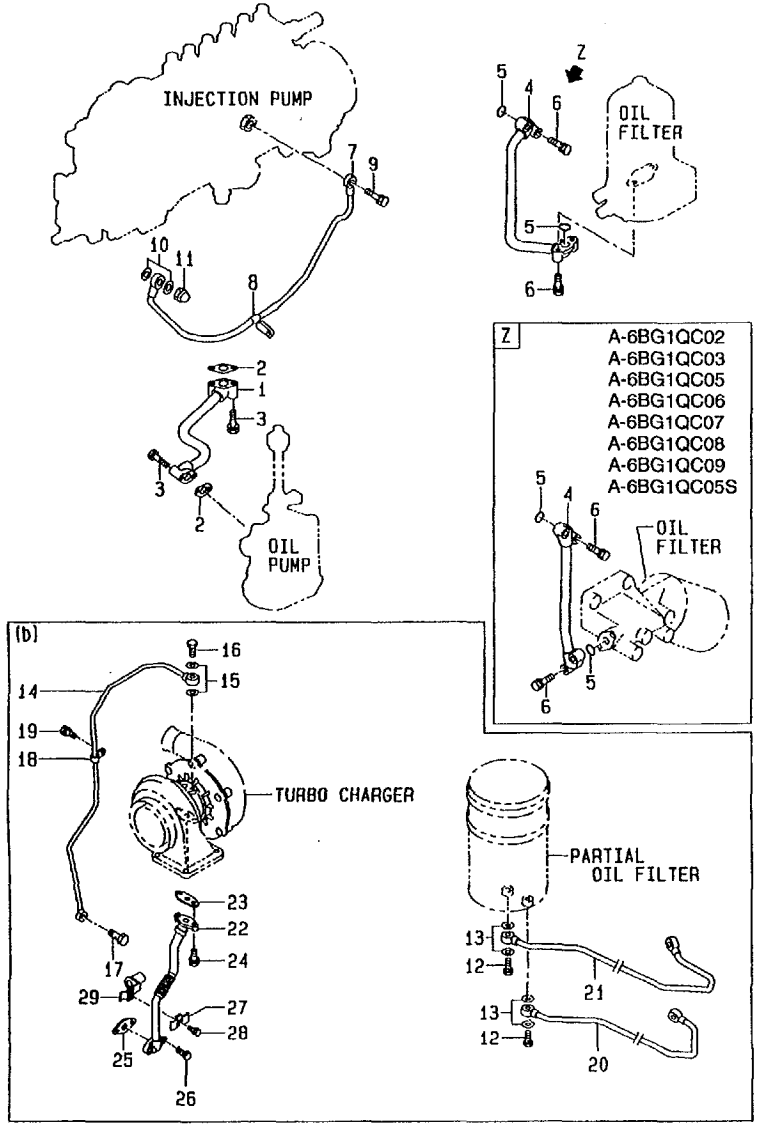

No.	Part No.	Description	Req'd	Remarks・Serial No.
19	Z-0-5004-0816-0	BOLT	1	B
				-1997.7
-	Z-0-2808-0812-0	BOLT	1	B
				1997.8-
20	Z-1-13312-469-0	PIPE	1	B
21	Z-1-13312-470-0	PIPE	1	B
22	Z-1-13313-611-0	PIPE	1	B
23	Z-1-09637-058-1	* PACKING	1	B
24	Z-0-5005-1025-0	BOLT	2	B
				-1997.7
-	Z-0-2878-1025-0	BOLT	2	B
				1997.8-
25	Z-1-09637-060-0	* PACKING	1	B
26	Z-0-5004-0850-0	BOLT	2	B
				-1997.7
-	Z-0-2808-0850-0	BOLT	2	B
				1997.8-
27	Z-9-09716-114-0	CLIP	1	B
28	Z-0-5004-0625-0	BOLT	1	B
29	Z-1-09701-242-0	CLIP	1	B

G-5 OIL PUMP
(EZA61520)

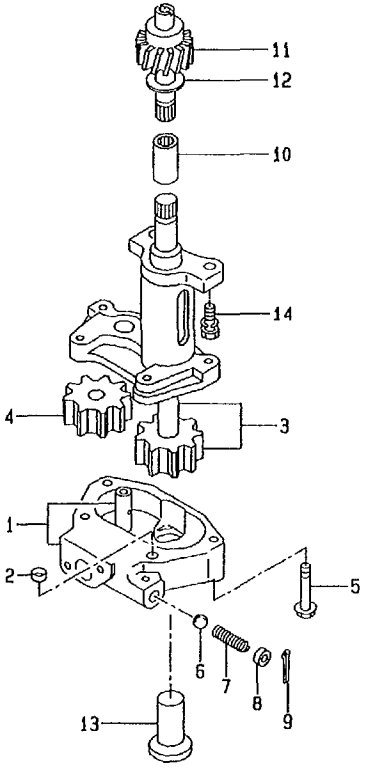

A: A-6BG1QC
B: A-6BG1TQC
C: A-6BG1QC02
D: A-6BG1QC03
E: A-6BG1QC05
F: A-6BG1QC06
G: A-6BG1QC07
H: A-6BG1QC08
J: A-6BG1QC09
K: A-6BG1QC05S

No.	Part No.	Description	Req'd	Remarks · Serial No.
A	Z-1-13100-204-0	PUMP,OIL	1	INC.1-13
1	Z-1-13113-047-0	COVER	1	INC.2
2	Z-1-13119-003-0	DOWEL	1	
3	Z-5-13121-005-0	GEAR	1	DRIVE
4	Z-5-13125-001-0	GEAR	1	DRIVEN
5	Z-1-09044-047-0	BOLT	4	
6	Z-5-09843-003-0	BALL	1	
7	Z-5-09580-098-0	SPRING	1	
8	Z-5-13165-004-0	SEAT	1	
9	Z-9-0810-4030-0	PIN	1	SPLIT
10	Z-1-13123-016-0	COUPLING	1	
11	Z-1-13128-018-0	PINION	1	
12	Z-9-13119-010-0	COLLAR	1	
13	Z-1-13140-079-0	STRAINER	1	
14	Z-0-5004-1025-0	BOLT	2	A,B -1997.1
-	Z-0-2868-1025-0	BOLT	2	A,B 1997.2-
-	Z-0-2868-1025-0	BOLT	2	C,D,E,F,G,H,J,K

G-7 OIL FILTER (FOR A, B)
(EZA61530)

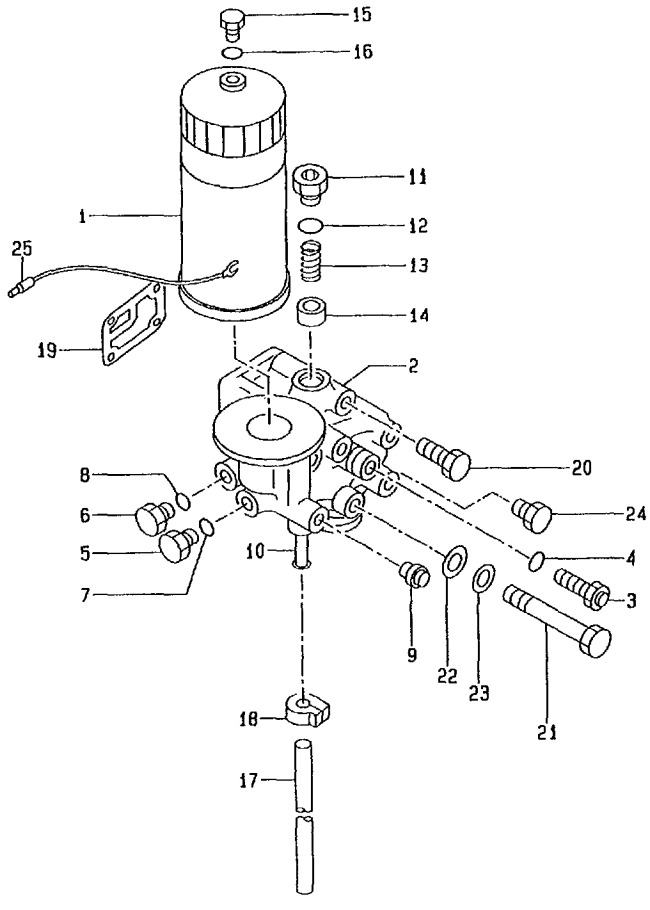

A: A-6BG1QC
B: A-6BG1TQC
C: A-6BG1QC02
D: A-6BG1QC03
E: A-6BG1QC05
F: A-6BG1QC06
G: A-6BG1QC07
H: A-6BG1QC08
J: A-6BG1QC09
K: A-6BG1QC05S

No.	Part No.	Description	Req'd	Remarks · Serial No.
A1	Z-1-13200-655-6	FILTER	1	A INC.1-16
A2	Z-1-13200-746-4	FILTER,OIL	1	B INC.1-16
1	20801-01391	ELEMENT	1	A,B INC.15,16
2	Z-1-13211-147-1	BODY	1	A INC.3-14
-	Z-1-13211-163-1	COVER	1	B INC.3-14
3	Z-1-13260-062-1	VALVE	1	A,B INC.4
4	Z-1-09623-163-0	O-RING	1	A,B
5	Z-9-13226-011-0	PLUG	1	A,B
6	Z-1-13219-152-0	PLUG	1	A,B
7	Z-9-09920-526-0	O-RING	1	A,B
8	Z-1-13219-188-0	O-RING	1	A,B
9	Z-1-13219-295-0	PLUG	1	A,B
10	Z-1-13219-150-0	PIPE	1	A,B
11	Z-1-13219-235-0	PLUG	1	A,B VALVE
12	Z-1-13219-190-0	PACKING	1	A,B
13	Z-1-13219-191-0	SPRING	1	A,B
14	Z-1-13262-008-0	VALVE	1	A,B RELIEF
15	Z-1-13219-192-0	PLUG	1	A,B
16	Z-5-09623-024-1	O-RING	1	A,B
17	Z-9-09914-701-0	HOSE,VINYL	1	A,B
18	Z-9-09715-098-0	CLIP	1	A,B
K1	Z-1-87811-031-4	KIT,REPAIR	1	A ENGINE OVERHAUL INC.19,22 & etc.
K2	Z-1-87811-223-2	KIT,REPAIR	1	B ENGINE OVERHAUL INC.19,22 & etc.
19	Z-8-94370-670-0	* PACKING	1	A,B
20	Z-9-09800-928-1	BOLT	1	A,B
21	Z-9-09800-928-1	BOLT	2	A
-	Z-0-5014-1040-0	BOLT	2	B -1997.7

G-8 OIL FILTER (FOR A, B)
(EZA61530)

A: A-6BG1QC
B: A-6BG1TQC
C: A-6BG1QC02
D: A-6BG1QC03
E: A-6BG1QC05
F: A-6BG1QC06
G: A-6BG1QC07
H: A-6BG1QC08
J: A-6BG1QC09
K: A-6BG1QC05S

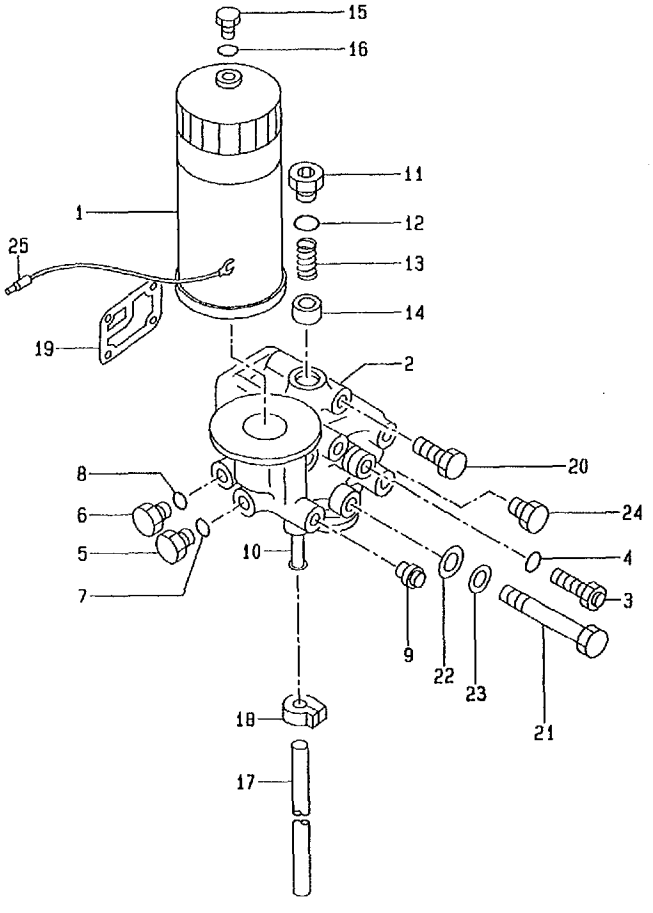

No.	Part No.	Description	Req'd	Remarks • Serial No.
21	Z-0-2868-1040-0	BOLT	2	B
				1997.8-
22	Z-9-0957-2010-0	* PACKING	2	A,B
23	Z-9-0916-0510-0	WASHER	2	A,B
24	Z-1-09604-094-0	PLUG	1	A
25	Z-9-8293-1743-0	CABLE-ASSY	1	A,B
				OIL FILTER
26	Z-8-94148-617-1	+BOLT	1	A,B

G-10 OIL FILTER (FOR C, D, E, F, G, H, J, K)
(EZA61540)

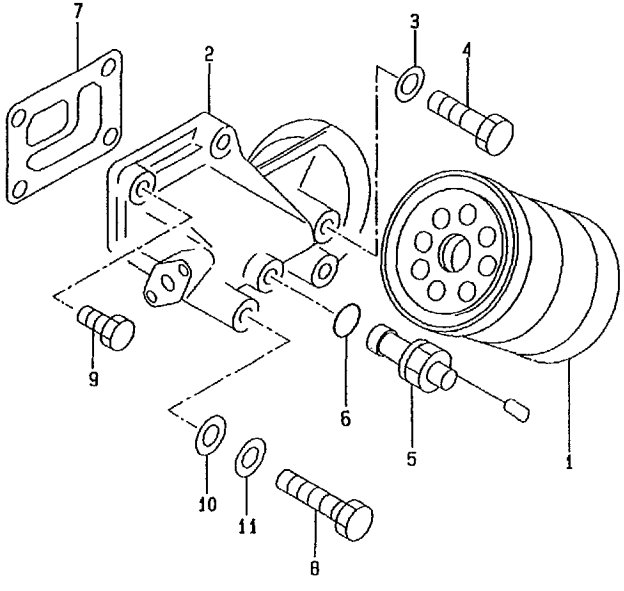

A: A-6BG1QC
B: A-6BG1TQC
C: A-6BG1QC02
D: A-6BG1QC03
E: A-6BG1QC05
F: A-6BG1QC06
G: A-6BG1QC07
H: A-6BG1QC08
J: A-6BG1QC09
K: A-6BG1QC05S

No.	Part No.	Description	Req'd	Remarks · Serial No.
A	Z-1-13200-551-2	FILTER,OIL	1	C,D,E,F,G,H,J,K INC.1-6
1	Z-1-13240-046-1	ELEMENT	1	C,D,E,F,G,H,J,K
2	Z-1-13212-093-1	BODY	1	C,D,E,F,G,H,J,K
3	Z-9-0956-2215-0	O-RING	1	C,D,E,F,G,H,J,K
4	Z-9-13263-010-0	CAP	1	C,D,E,F,G,H,J,K
5	Z-1-13260-062-1	VALVE	1	C,D,E,F,G,H,J,K INC.6
6	Z-1-09623-163-0	O-RING	1	C,D,E,F,G,H,J,K
K1	Z-1-87811-628-2	KIT,REPAIR	1	C,D,E,F,H,J,K ENGINE OVERHAUL INC.7,10 & etc.
K2	Z-1-87811-887-0	KIT,REPAIR	1	G ENGINE OVERHAUL INC.7,10 & etc.
7	Z-8-94370-670-0	* PACKING	1	C,D,E,F,G,H,J,K
8	Z-9-09800-928-1	BOLT	2	C,D,E,F,G,H,J,K
9	Z-0-2868-1040-0	BOLT	2	C,D,E,F,G,H,J,K
10	Z-9-0957-2010-0	* PACKING	2	C,D,E,F,G,H,J,K
11	Z-9-0916-0510-0	WASHER	2	C,D,E,F,G,H,J,K

G-12 PARTIAL OIL FILTER (FOR B)
(EZA61550)

A: A-6BG1QC
B: A-6BG1TQC
C: A-6BG1QC02
D: A-6BG1QC03
E: A-6BG1QC05
F: A-6BG1QC06
G: A-6BG1QC07
H: A-6BG1QC08
J: A-6BG1QC09
K: A-6BG1QC05S

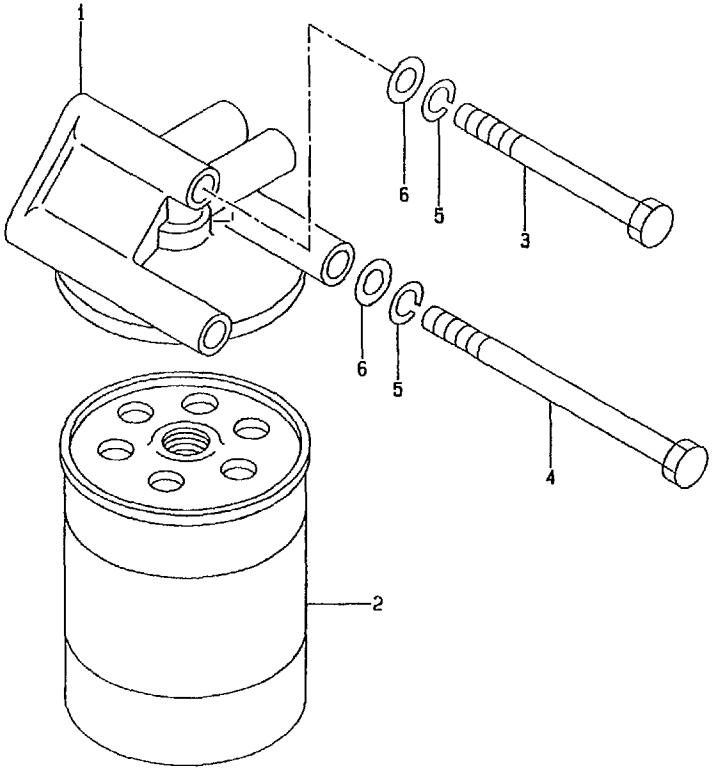

No.	Part No.	Description	Req'd	Remarks · Serial No.
A	Z-1-13200-654-2	FILTER	1	B INC.1,2
1	Z-1-13212-120-0	COVER	1	B
2	20801-01251	ELEMENT,OIL	1	B
3	Z-8-94148-617-1	BOLT	1	B
4	Z-1-09000-282-1	BOLT	2	B -1997.7
-	Z-0-2808-6015-0	BOLT	2	B 1997.8-
5	Z-9-0915-0510-0	WASHER	3	B -1997.7
6	Z-9-0916-0510-0	WASHER	3	B -1997.7

H-2 FAN
(EZA61610)

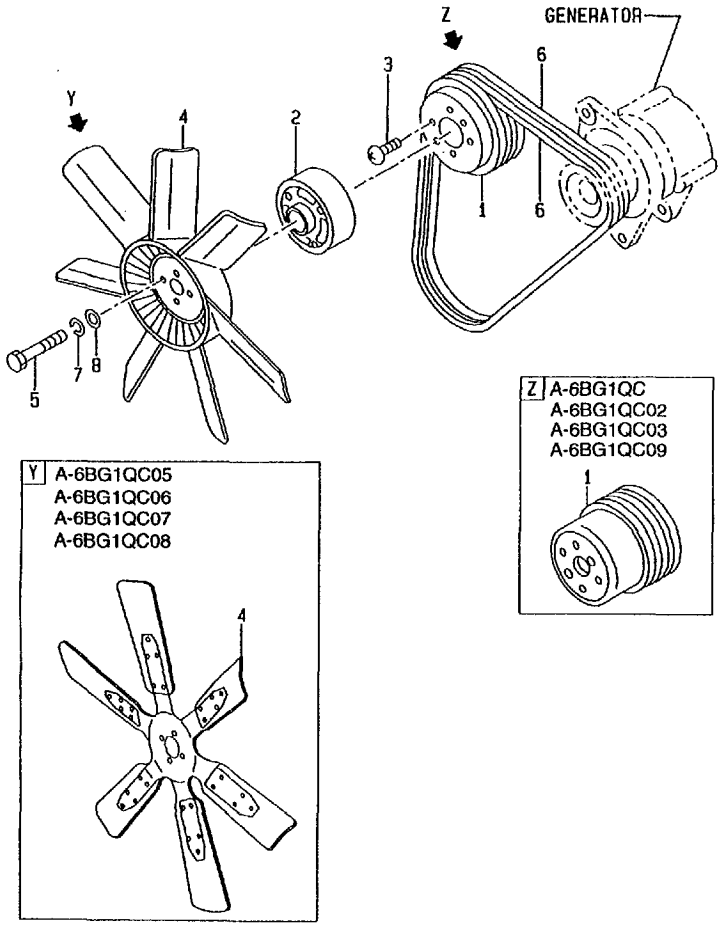

A: A-6BG1QC
B: A-6BG1TQC
C: A-6BG1QC02
D: A-6BG1QC03
E: A-6BG1QC05
F: A-6BG1QC06
G: A-6BG1QC07
H: A-6BG1QC08
J: A-6BG1QC09
K: A-6BG1QC05S

No.	Part No.	Description	Req'd	Remarks • Serial No.
1	Z-5-13641-038-1	PULLEY	1	A,C,D,J
-	Z-5-13641-017-1	PULLEY	1	B -1996.10
-	Z-1-13641-165-0	PULLEY	1	B 1996.11-
-	Z-1-13641-187-0	PULLEY	1	E,F,G,H,K
2	Z-1-13642-030-0	SPACER	1	A,B t=32.0mm -1995.12
-	Z-1-13642-036-0	SPACER	1	A,B t=25.0mm 1996.1-
-	Z-1-13642-031-0	SPACER	1	A,B t=38.5mm -1995.12
-	Z-8-94434-075-0	SPACER	1	A,B t=51.7mm 1996.1-
-	Z-1-13642-033-0	SPACER	1	C,D,J t=30.5mm
-	Z-1-13642-044-1	SPACER	1	E,F,G,H t=41.0mm
3	Z-9-0349-0610-0	SCREW	2	A,B,C,D,E,F,G
4	Z-8-94483-897-1	FAN	1	A,B,C,D,J
-	Z-8-97069-902-0	FAN	1	E,F,G,H
-	Z-8-94483-894-0	FAN-ASSY	1	K
5	Z-1-09044-074-0	BOLT	4	A,B -1995.12
-	Z-0-2809-0800-0	BOLT	4	A 1996.1-
-	Z-1-09044-075-1	BOLT	4	B 1996.1-
-	Z-1-09044-071-1	BOLT	4	C,D,E,F,G,H,J
-	Z-0-2808-0812-0	BOLT	4	K
6	Z-1-13671-288-0	BELT	1	A,B
-	Z-1-13671-226-0	SET,BELT	1	C,D,J
-	Z-1-13671-209-0	BELT	1	E,F,G,K
-	Z-1-13671-302-0	BELT	1	H
7	Z-9-0915-0508-0	WASHER	4	1996.1-

H-3 FAN
(EZA61610)

A: A-6BG1QC
B: A-6BG1TQC
C: A-6BG1QC02
D: A-6BG1QC03
E: A-6BG1QC05
F: A-6BG1QC06
G: A-6BG1QC07
H: A-6BG1QC08
J: A-6BG1QC09
K: A-6BG1QC05S

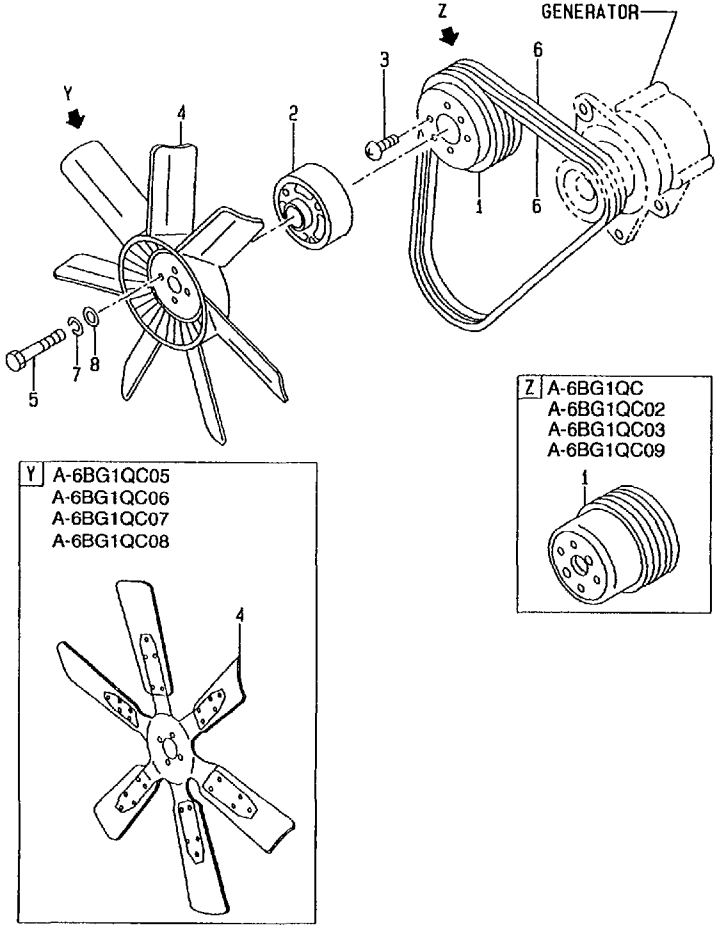

No.	Part No.	Description	Req'd	Remarks • Serial No.
8	Z-9-0916-4708-0	WASHER	4	A,B 1996.1-
-	Z-9-0916-4708-0	WASHER	4	C,D,E,F,G,H,J,K

H-5 WATER PUMP (FOR A, B, C, D, J)
(EZA61620)

A: A-6BG1QC
B: A-6BG1TQC
C: A-6BG1QC02
D: A-6BG1QC03
E: A-6BG1QC05
F: A-6BG1QC06
G: A-6BG1QC07
H: A-6BG1QC08
J: A-6BG1QC09
K: A-6BG1QC05S

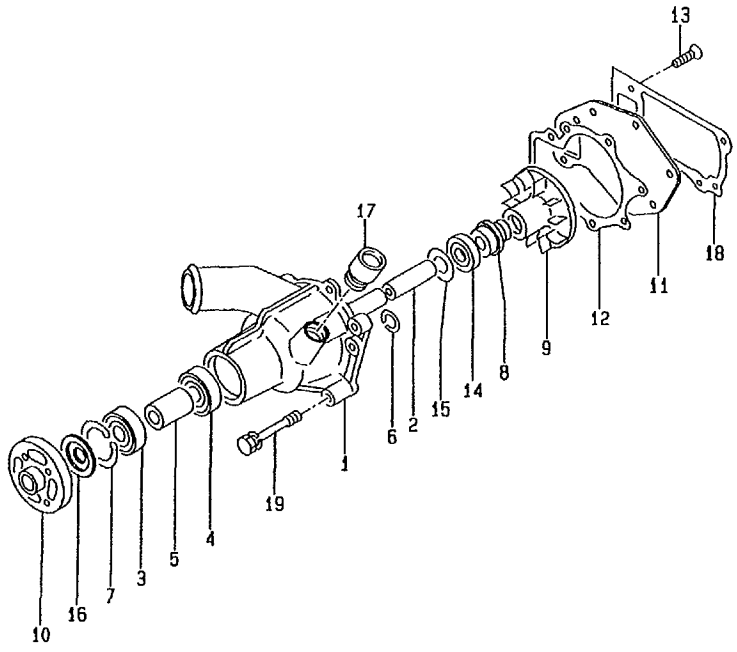

No.	Part No.	Description	Req'd	Remarks • Serial No.
K1	Z-1-13650-018-0	KIT,PUMP,WATER	1	A,B,C,D,J INC.1-18
A	Z-1-13610-800-1	PUMP,WATER	1	A,B INC.1-17
K2	Z-1-87810-774-1	KIT,REPAIR	1	A,B INC.2,6-9,12,14-16 -1995.10
-	Z-1-87811-253-0	KIT,REPAIR	1	A,B INC.2,6-9,12,14-16 1995.11-
K3	Z-1-87811-253-0	KIT,REPAIR	1	C,D,J INC.2,6-9,12,14-16
1	NO PART NO.	* BODY	1	A,B,C,D,J
2	Z-1-13631-074-0	* SHAFT	1	A,B,C,D,J
3	Z-5-09800-051-0	* BRG,BALL	1	A,B,C,D,J
4	Z-5-09800-050-0	* BRG,BALL	1	A,B,C,D,J
5	Z-5-13634-002-0	* SPACER	1	A,B,C,D,J
6	Z-9-09952-143-0	* RING,SNAP	1	A,B,C,D,J
7	Z-9-0918-0152-0	* RING,SNAP	1	A,B,C,D,J
8	Z-5-13620-006-2	* UNIT,SEAL	1	A,B,C,D,J
9	Z-9-13621-802-0	* WHEEL,IMPELLER	1	A,B,C,D,J
10	Z-5-13642-007-2	* PULLEY,CENTER	1	A,B,C,D,J
11	Z-9-13612-802-0	* COVER	1	A,B,C,D,J
12	Z-9-13613-613-0	* PACKING	1	A,B,C,D,J COVER
13	Z-9-0309-0820-0	* SCREW	3	A,B
14	Z-5-09625-055-0	* SEAL	1	A,B SECONDARY
15	Z-1-09503-070-0	* WASHER	1	A,B
16	Z-5-13639-001-0	* THROWER,DUST	1	A,B,C,D,J
17	Z-1-09660-119-2	* CONNECTOR	1	A,B
K4	Z-1-87811-031-4	KIT,REPAIR	1	A ENGINE OVERHAUL INC.18 & etc.
K5	Z-1-87811-223-2	KIT,REPAIR	1	B ENGINE OVERHAUL INC.18 & etc.
K6	Z-1-87811-628-2	KIT,REPAIR	1	C,D,J ENGINE OVERHAUL INC.18 & etc.

H-6 WATER PUMP (FOR A, B, C, D, J)
(EZA61620)

A : A-6BG1QC
B : A-6BG1TQC
C : A-6BG1QC02
D : A-6BG1QC03
E : A-6BG1QC05
F : A-6BG1QC06
G : A-6BG1QC07
H : A-6BG1QC08
J : A-6BG1QC09
K : A-6BG1QC05S

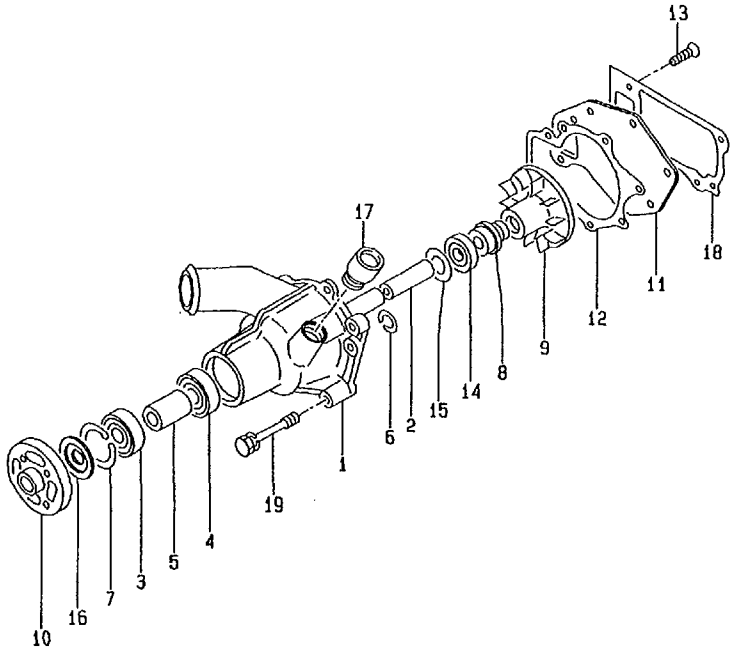

No.	Part No.	Description	Req'd	Remarks · Serial No.
18	Z-8-94370-661-0	* PACKING	1	A,B,C,D,J
19	Z-5-09030-010-1	BOLT	1	A,B -1997.7
-	Z-0-2808-1070-0	BOLT	1	A,B 1997.8-
-	Z-0-2808-1070-0	BOLT	1	C,D,J
-	Z-0-5004-1050-0	BOLT	2	A,B -1997.7
-	Z-0-2808-1050-0	BOLT	2	A,B 1997.8-
-	Z-0-2808-1050-0	BOLT	2	C,D,J
-	Z-0-5004-1035-0	BOLT	1	A,B -1997.7
-	Z-0-2868-1035-0	BOLT	1	A,B 1997.8-
-	Z-0-2868-1035-0	BOLT	1	C,D,J

H-8 WATER PUMP (FOR E, F, G, H, K)
(EZA61640)

A: A-6BG1QC
B: A-6BG1TQC
C: A-6BG1QC02
D: A-6BG1QC03
E: A-6BG1QC05
F: A-6BG1QC06
G: A-6BG1QC07
H: A-6BG1QC08
J: A-6BG1QC09
K: A-6BG1QC05S

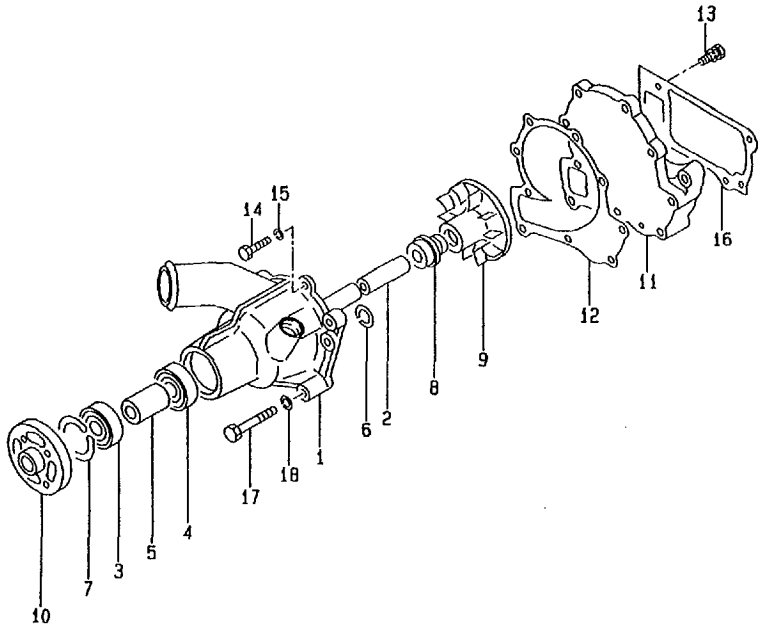

No.	Part No.	Description	Req'd	Remarks · Serial No.
K1	Z-1-13610-876-1	KIT,PUMP,WATER	1	E,F,G,H,K
				INC.1-16
K2	Z-1-87810-223-5	KIT,REPAIR	1	E,F,G,H,K
				INC.2,6-9,12
1	NO PART NO.	* BODY	1	E,F,G,H,K
2	Z-5-13631-007-1	* SHAFT	1	E,F,G,H,K
3	Z-5-09800-008-0	* BRG,BALL	1	E,F,G,H,K
4	Z-5-09800-008-0	* BRG,BALL	1	E,F,G,H,K
5	Z-5-13634-005-0	* SPACER	1	E,F,G,H,K
6	Z-9-09952-143-0	* RING,SNAP	1	E,F,G,H,K
7	Z-9-0918-0147-0	* RING,SNAP	1	E,F,G,H,K
8	Z-5-13620-006-2	* UNIT,SEAL	1	E,F,G,H,K
9	Z-9-13621-802-0	* WHEEL,IMPELLER	1	E,F,G,H,K
10	Z-5-13642-007-2	* PULLEY,CENTER	1	E,F,G,H,K
11	Z-5-13612-007-1	* COVER	1	E,F,G,H,K
12	Z-5-13613-006-1	* PACKING	1	E,F,G,H,K
				COVER
13	Z-9-0190-0822-0	* BOLT	1	E,F,G,H,K
14	Z-9-0105-6045-0	* BOLT	4	E,F,G,H,K
15	NO PART NO.	* WASHER	4	E,F,G,H,K
K3	Z-1-87811-628-2	KIT,REPAIR	1	E,F,H,K
				ENGINE OVERHAUL
				INC.16 & etc.
K4	Z-1-87811-887-0	KIT,REPAIR	1	G
				ENGINE OVERHAUL
				INC.16 & etc.
16	Z-8-94370-661-0	* PACKING	1	E,F,G,H,K
17	Z-0-1080-6090-0	BOLT	1	E,F,G,H,K
-	Z-0-1080-6080-0	BOLT	1	E,F,G,H,K
-	Z-0-1080-6065-0	BOLT	2	E,F,G,H,K
18	Z-9-0915-0510-0	WASHER	4	E,F,G,H,K

H-10 THERMOSTAT
(EZA61630)

A: A-6BG1QC
B: A-6BG1TQC
C: A-6BG1QC02
D: A-6BG1QC03
E: A-6BG1QC05
F: A-6BG1QC06
G: A-6BG1QC07
H: A-6BG1QC08
J: A-6BG1QC09
K: A-6BG1QC05S

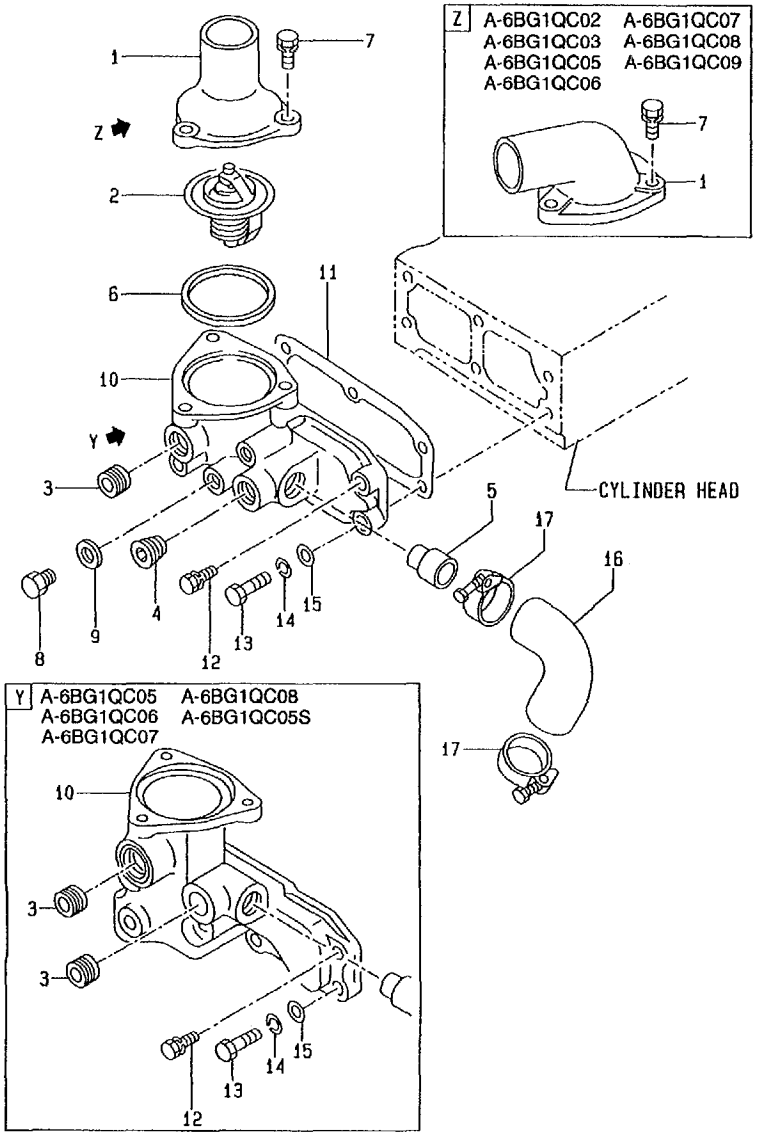

No.	Part No.	Description	Req'd	Remarks • Serial No.
1	Z-1-13713-037-0	JOINT	1	A,B,K THERMOSTAT
-	Z-5-13713-009-1	PIPE	1	C,D,E,F,G,H,J THERMOSTAT
2	Z-1-13770-071-0	THERMOSTAT	1	A
-	Z-1-13770-070-0	THERMOSTAT	1	B -1996.2
-	Z-1-13770-071-0	THERMOSTAT	1	B 1996.3-
-	Z-1-13770-070-0	THERMOSTAT	1	C,D,E,F,G,H,J,K
3	Z-9-09664-005-0	PLUG	1	A,B,C,D,J
-	Z-9-09664-005-0	PLUG	2	E,F,G,H,K
4	Z-9-09662-034-0	PLUG	1	A,B,C,D,J
5	Z-5-13721-015-2	PIPE	1	
K1	Z-1-87811-031-4	KIT,REPAIR	1	A ENGINE OVERHAUL INC.6,11 & etc.
K2	Z-1-87811-223-2	KIT,REPAIR	1	B ENGINE OVERHAUL INC.6,11 & etc.
K3	Z-1-87811-628-2	KIT,REPAIR	1	C,D,E,F,H,J,K ENGINE OVERHAUL INC.6,11 & etc.
K4	Z-1-87811-887-0	KIT,REPAIR	1	G ENGINE OVERHAUL INC.6,11 & etc.
K5	Z-1-87811-242-0	KIT,REPAIR	1	A,B ENGINE TOP OVERHAUL INC.6,11 & etc.
K6	Z-1-87810-945-1	KIT,REPAIR	1	C,D,E,F,G,H,J,K ENGINE TOP OVERHAUL INC.6,11 & etc.
6	Z-1-13743-016-0	* PACKING	1	
7	Z-0-5014-0825-0	BOLT	3	
8	Z-9-09661-005-0	PLUG	2	A,C,D,J
-	Z-9-09661-005-0	PLUG	3	B
9	Z-9-0957-1416-0	PACKING	2	A,C,D,J
-	Z-9-0957-1416-0	PACKING	3	B
10	Z-5-13716-026-0	HOUSING	1	A,B,C,D,J THERMOSTAT

H-11 THERMOSTAT
(EZA61630)

A: A-6BG1QC
B: A-6BG1TQC
C: A-6BG1QC02
D: A-6BG1QC03
E: A-6BG1QC05
F: A-6BG1QC06
G: A-6BG1QC07
H: A-6BG1QC08
J: A-6BG1QC09
K: A-6BG1QC05S

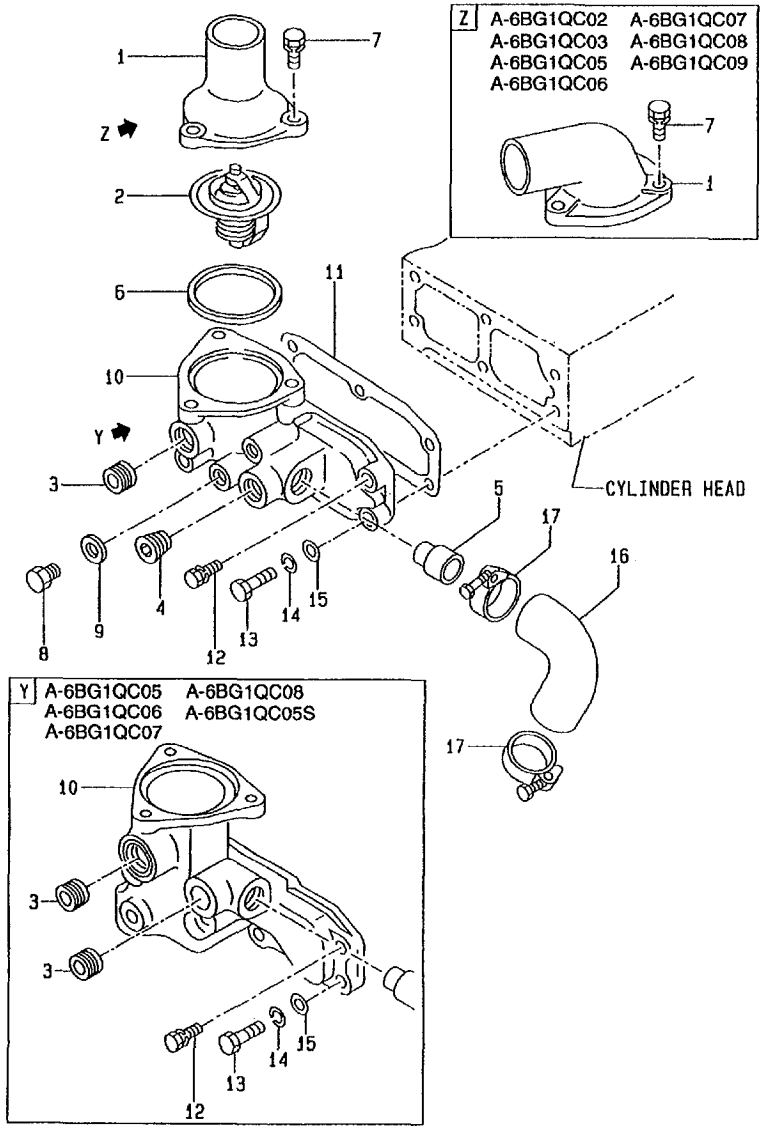

No.	Part No.	Description	Req'd	Remarks · Serial No.
10	Z-5-13716-034-2	HOUSING	1	E,F,G,H,K
				THERMOSTAT
11	Z-1-13741-013-0	* PACKING	1	
12	Z-0-5014-1035-0	BOLT	1	A,B
				-1997.7
-	Z-0-2868-1035-0	BOLT	1	A,B
				1997.8-
-	Z-0-2868-1035-0	BOLT	1	H
-	Z-0-2868-1035-0	BOLT	3	C,D,E,F,G,J,K
13	Z-0-1080-6095-0	BOLT	3	A,B,C,D,J
14	Z-9-0915-0510-0	WASHER	3	
15	Z-9-0916-0510-0	WASHER	3	
16	Z-5-13721-014-1	HOSE	1	A,B
				-1997.4
-	Z-8-97138-086-0	HOSE	1	A,B
				1997.5-
-	Z-8-97138-086-0	HOSE	1	C,D,E,F,G,H,J,K
17	Z-5-09704-046-0	CLIP	2	

H-13 OIL COOLER
(EZA61560)

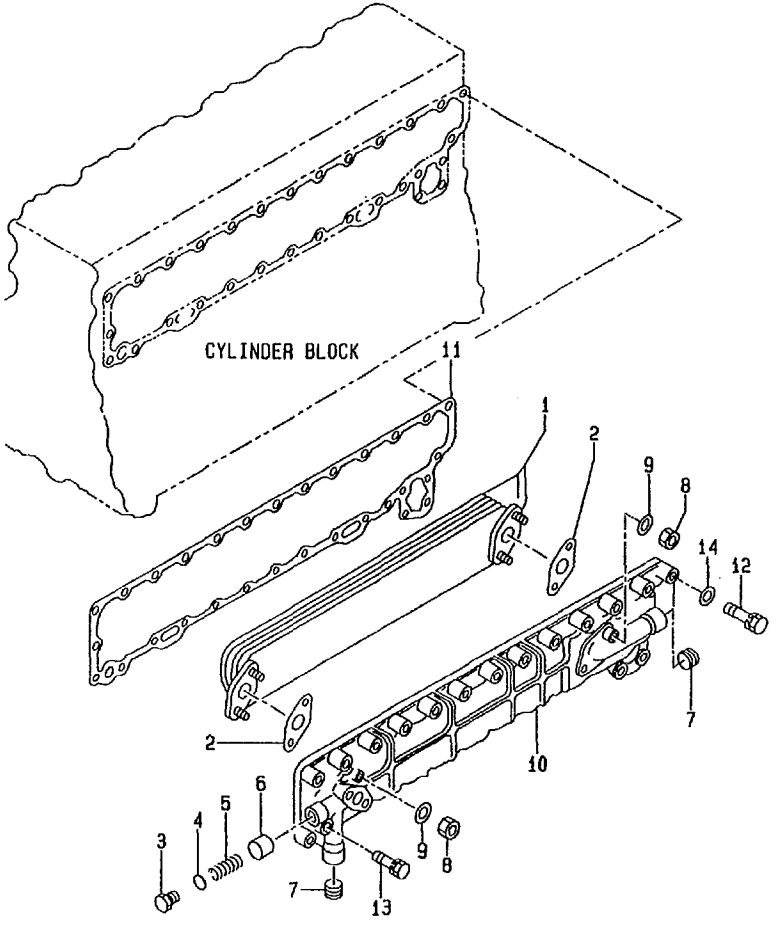

A: A-6BG1QC
B: A-6BG1TQC
C: A-6BG1QC02
D: A-6BG1QC03
E: A-6BG1QC05
F: A-6BG1QC06
G: A-6BG1QC07
H: A-6BG1QC08
J: A-6BG1QC09
K: A-6BG1QC05S

No.	Part No.	Description	Req'd	Remarks • Serial No.
A1	Z-1-21700-249-1	COOLER,OIL	1	A,C,D,E,F,G,H,J,K INC.1-10
A2	Z-1-21700-293-0	COOLER,OIL	1	B INC.1-10 -1995.7
-	Z-1-21700-298-0	COOLER,OIL	1	B INC.1-10 1995.8-
1	Z-1-11282-018-0	ELEMENT	1	A,C,D,E,F,G,H,J,K
-	Z-1-11282-025-0	ELEMENT	1	B
2	Z-1-11282-014-0	• GASKET	2	
3	Z-9-13263-010-0	CAP	1	
4	Z-9-0956-2215-0	O-RING	1	
5	Z-5-09580-092-0	SPRING	1	
6	Z-5-11288-001-0	VALVE	1	BY-PASS
7	Z-5-09605-017-0	PLUG	2	
8	Z-9-0911-1410-0	NUT	4	
9	Z-9-0916-4510-0	WASHER	4	
10	Z-1-11281-028-1	BODY	1	A,C,D,E,F,G
-	Z-1-11281-036-0	BODY,OIL-COOLER	1	B -1995.7
-	Z-1-11281-037-0	BODY	1	B 1995.8-
K1	Z-1-87811-031-4	KIT,REPAIR	1	A ENGINE OVERHAUL INC.11 & etc.
K2	Z-1-87811-223-2	KIT,REPAIR	1	B ENGINE OVERHAUL INC.11 & etc.
K3	Z-1-87811-628-2	KIT,REPAIR	1	C,D,E,F,H,J,K ENGINE OVERHAUL INC.11 & etc.
K4	Z-1-87811-887-0	KIT,REPAIR	1	G ENGINE OVERHAUL INC.11 & etc.
11	Z-1-11282-020-0	* PACKING	1	
12	Z-8-94205-986-1	BOLT	1	A,C,D,E,F,G,H,J,K
-	Z-0-5004-0870-0	BOLT	1	B
13	Z-0-5014-0845-0	BOLT	12	A,C,D,E,F,G,H,J,K

H-14 OIL COOLER
(EZA61560)

A: A-6BG1QC
B: A-6BG1TQC
C: A-6BG1QC02
D: A-6BG1QC03
E: A-6BG1QC05
F: A-6BG1QC06
G: A-6BG1QC07
H: A-6BG1QC08
J: A-6BG1QC09
K: A-6BG1QC05S

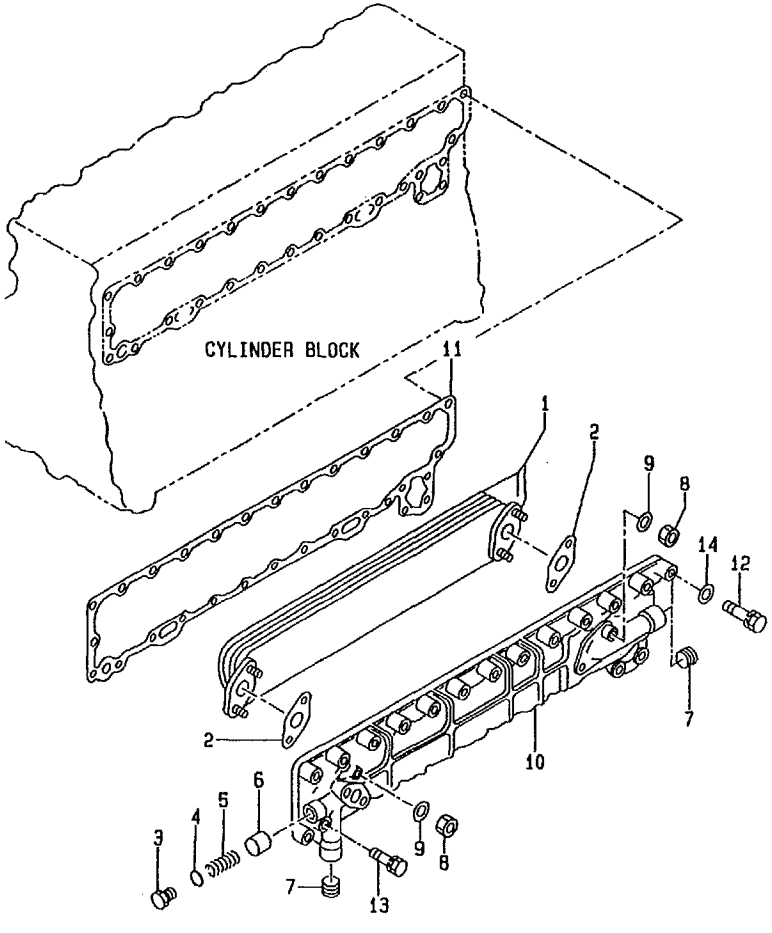

No.	Part No.	Description	Req'd	Remarks • Serial No.
13	Z-0-5014-0845-0	BOLT	12	B 1995.9-
-	Z-0-5014-0835-0	BOLT	9	B -1995.8
-	Z-0-5014-0828-0	BOLT	15	A,C,D,E,F,G,H,J,K
-	Z-0-5014-0828-0	BOLT	15	B 1995.9-
-	Z-0-5014-0828-0	BOLT	6	B -1995.8
-	Z-0-5014-0850-0	BOLT	12	B -1995.8
-	Z-1-09030-091-0	BOLT	2	
14	Z-9-0916-0508-0	WASHER	1	

I-2 INJECTION PIPING
(EZA61710)

A: A-6BG1QC
B: A-6BG1TQC
C: A-6BG1QC02
D: A-6BG1QC03
E: A-6BG1QC05
F: A-6BG1QC06
G: A-6BG1QC07
H: A-6BG1QC08
J: A-6BG1QC09
K: A-6BG1QC05S

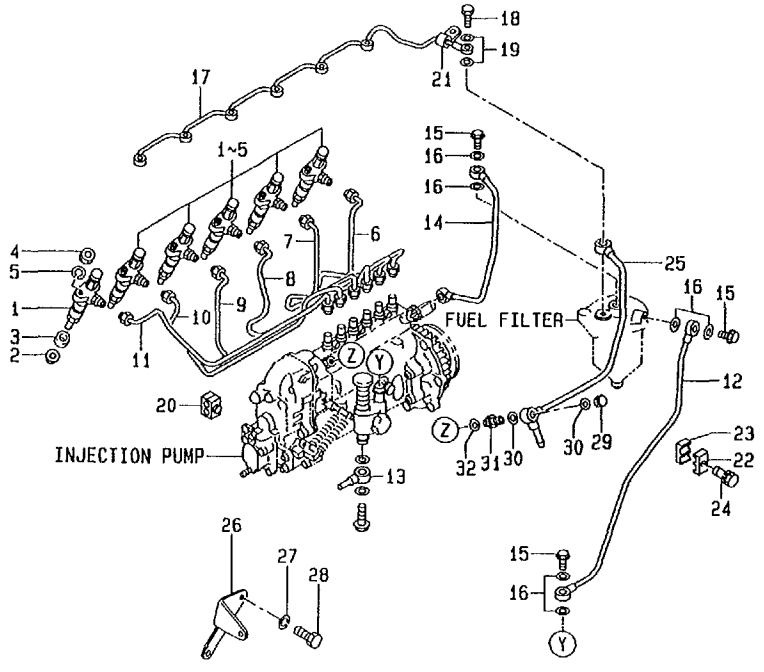

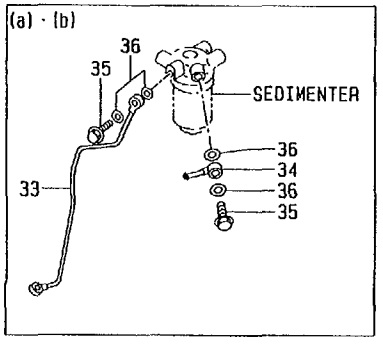

No.	Part No.	Description	Req'd	Remarks • Serial No.
1	Z-1-15300-291-2	NOZZLE	6	A SEE LOC. I-10
-	Z-1-15300-331-0	NOZZLE	6	B SEE LOC. I-10
-	Z-1-15300-375-0	NOZZLE	6	C,D,J SEE LOC. I-10
-	Z-8-97030-285-1	NOZZLE	6	E,F,G,H,K SEE LOC. I-10
K1	Z-1-87811-031-4	KIT,REPAIR	1	A ENGINE OVERHAUL INC.2,16,19 & etc.
K2	Z-1-87811-223-2	KIT,REPAIR	1	B ENGINE OVERHAUL INC.2,16,19 & etc.
K3	Z-1-87811-628-2	KIT,REPAIR	1	C,D,E,F,H,J,K ENGINE OVERHAUL INC.2,16,19 & etc.
K4	Z-1-87811-887-0	KIT,REPAIR	1	G ENGINE OVERHAUL INC.2,16,19 & etc.
2	Z-5-15315-003-0	* PACKING	6	
3	Z-9-15339-051-0	COVER,DUST	6	
4	Z-9-0911-0408-0	NUT	12	
5	Z-9-0915-0508-0	WASHER	12	
6	Z-1-15415-183-1	PIPE	1	A,C,D,E,F,G,H,J,K NO.1
-	Z-1-15415-847-0	PIPE	1	B NO.1
7	Z-1-15415-184-1	PIPE	1	A,C,D,E,F,G,H,J,K NO.2
-	Z-1-15415-848-0	PIPE	1	B NO.2
8	Z-1-15415-185-1	PIPE	1	A,C,D,E,F,G,H,J,K NO.3
-	Z-1-15415-849-0	PIPE	1	B NO.3
9	Z-1-15415-186-1	PIPE	1	A,C,D,E,F,G,H,J,K NO.4
-	Z-1-15415-850-0	PIPE	1	B NO.4

I-3 INJECTION PIPING
(EZA61710)

A: A-6BG1QC
B: A-6BG1TQC
C: A-6BG1QC02
D: A-6BG1QC03
E: A-6BG1QC05
F: A-6BG1QC06
G: A-6BG1QC07
H: A-6BG1QC08
J: A-6BG1QC09
K: A-6BG1QC05S

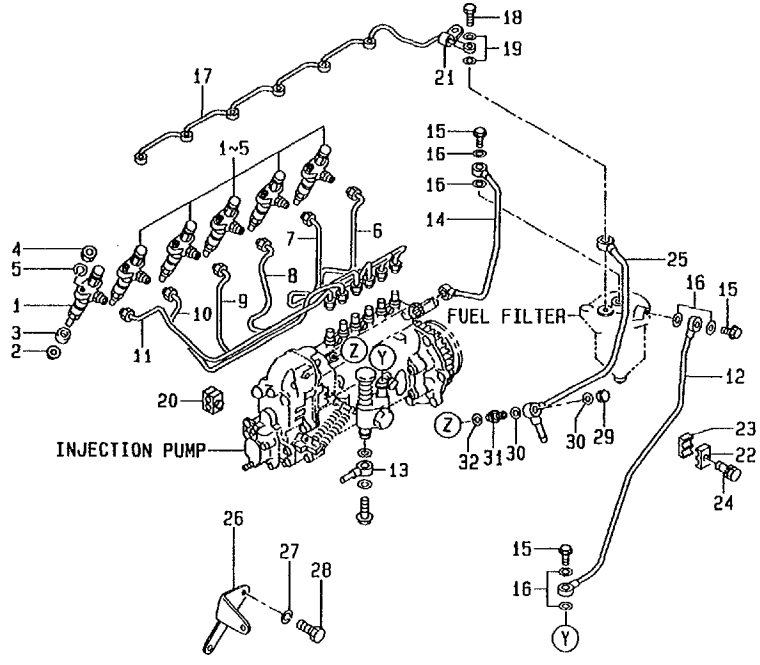

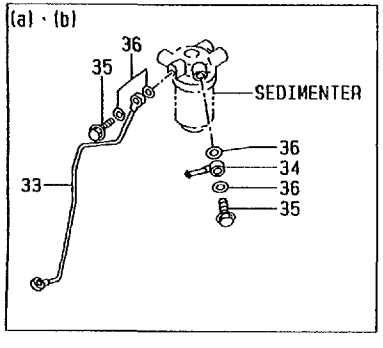

No.	Part No.	Description	Req'd	Remarks · Serial No.
10	Z-1-15415-187-1	PIPE	1	A,C,D,E,F,G,H,J,K
				NO.5
-	Z-1-15415-851-1	PIPE	1	B
				NO.5
11	Z-1-15415-188-1	PIPE	1	A,C,D,E,F,G,H,J,K
				NO.6
-	Z-1-15415-852-1	PIPE	1	B
				NO.6
12	Z-1-15414-294-0	PIPE	1	A,C,D,E,F,G,H,J,K
-	Z-1-15415-844-0	PIPE	1	B
13	Z-5-15411-223-1	JOINT,EYE	1	C,D,E,F,G,H,J,K
14	Z-1-15414-295-0	PIPE	1	A,C,D,E,F,G,H,J,K
-	Z-1-15415-845-0	PIPE	1	B
15	Z-1-09675-086-0	BOLT,EYE	4	
16	Z-1-09630-085-0	* PACKING	8	
17	Z-1-15412-471-1	PIPE	1	
18	Z-1-09675-037-1	BOLT	1	EYE
19	Z-1-09630-082-0	* PACKING	2	
20	Z-9-15419-612-0	CLIP	6	
21	Z-9-0952-4555-0	CLIP	1	
22	Z-5-09709-103-0	CLIP	3	
23	Z-5-09709-104-0	CLIP	5	A,C,D,E,F,G,H,J,K
-	Z-5-09709-104-0	CLIP	3	B
24	Z-0-5004-0630-0	BOLT	5	A,C,D,E,F,G,H,J,K
-	Z-0-5004-0630-0	BOLT	3	B
25	Z-1-15414-296-2	PIPE	1	A,C,D,E,F,G,H,J,K
-	Z-1-15415-846-0	PIPE	1	B
26	Z-5-15419-001-0	BRACKET	1	A,B
27	Z-9-0915-0510-0	WASHER	1	A
				-1997.1
28	Z-0-2080-1020-0	BOLT	1	A
				-1997.1
-	Z-0-2868-1020-0	BOLT	1	A
				1997.2-
29	Z-1-09468-002-1	NUT	1	
30	Z-1-09630-085-0	PACKING	2	
31	Z-1-13260-001-1	VALVE	1	OVER FLOW
32	Z-1-09630-085-0	PACKING	1	
33	Z-1-15415-810-2	PIPE	1	A
-	Z-1-15415-884-0	PIPE	1	B

I-4 INJECTION PIPING
(EZA61710)

A: A-6BG1QC
B: A-6BG1TQC
C: A-6BG1QC02
D: A-6BG1QC03
E: A-6BG1QC05
F: A-6BG1QC06
G: A-6BG1QC07
H: A-6BG1QC08
J: A-6BG1QC09
K: A-6BG1QC05S

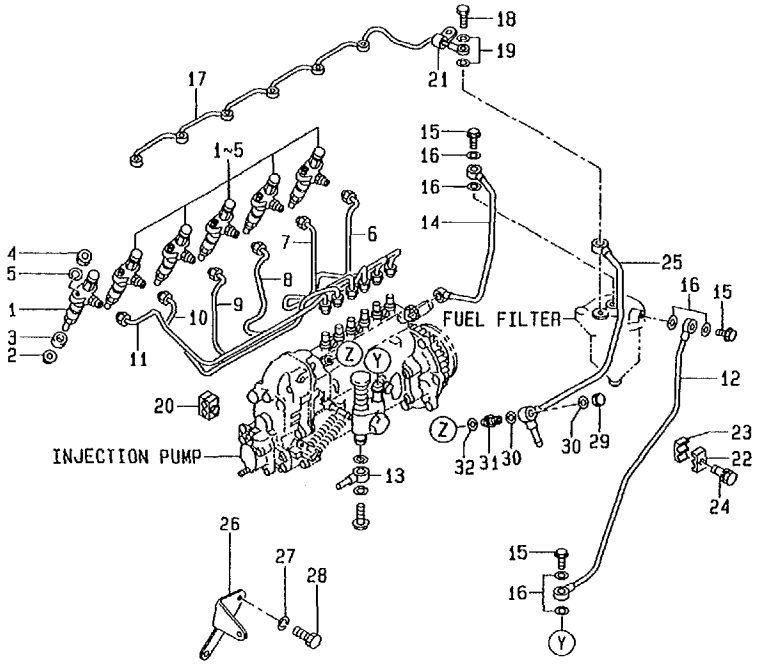

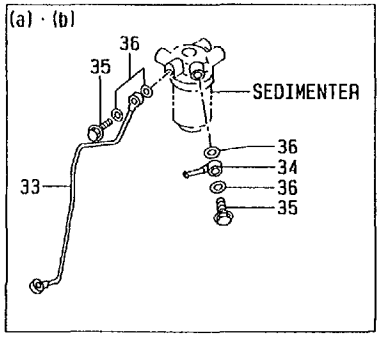

No.	Part No.	Description	Req'd	Remarks • Serial No.
34	Z-5-15411-223-1	JOINT,EYE	1	A,B
35	Z-1-09675-086-0	BOLT,EYE	1	A,B
-	Z-1-09675-063-0	BOLT,EYE	1	A,B
36	Z-1-09630-085-0	PACKING	4	A,B

I-6 FUEL FILTER
(EZA61720)

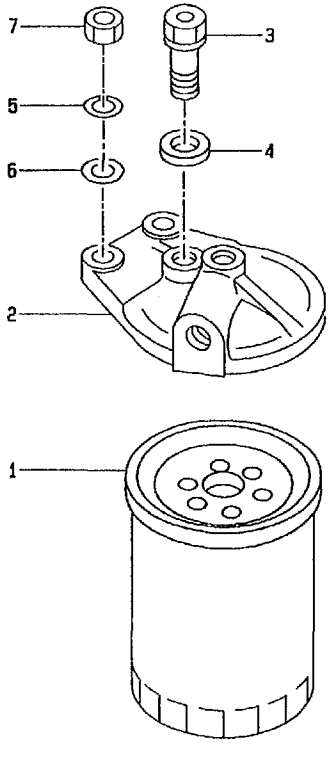

A: A-6BG1QC
B: A-6BG1TQC
C: A-6BG1QC02
D: A-6BG1QC03
E: A-6BG1QC05
F: A-6BG1QC06
G: A-6BG1QC07
H: A-6BG1QC08
J: A-6BG1QC09
K: A-6BG1QC05S

No.	Part No.	Description	Req'd	Remarks • Serial No.
A1	Z-1-13200-702-0	FILTER,FUEL	1	A,B
				INC.1-4
A2	Z-1-13200-701-1	FILTER,FUEL	1	C,D,E,F,G,H,J,K
				INC.1-4
1	Z-1-13240-068-0	ELEMENT,FUEL	1	A,B
-	Z-1-13240-069-1	CARTRIDGE	1	C,D,E,F,G,H,J,K
2	Z-1-13212-108-0	COVER	1	
3	Z-1-13260-047-0	VALVE-ASSY	1	
				OVER FLOW
4	Z-1-09630-085-0	PACKING	2	
5	Z-9-0915-0510-0	WASHER	2	
6	Z-9-0916-0510-0	WASHER	2	
7	Z-9-0911-0410-0	NUT	2	

I-8 SEDIMENTER (FOR A, B)

(EZA61730)

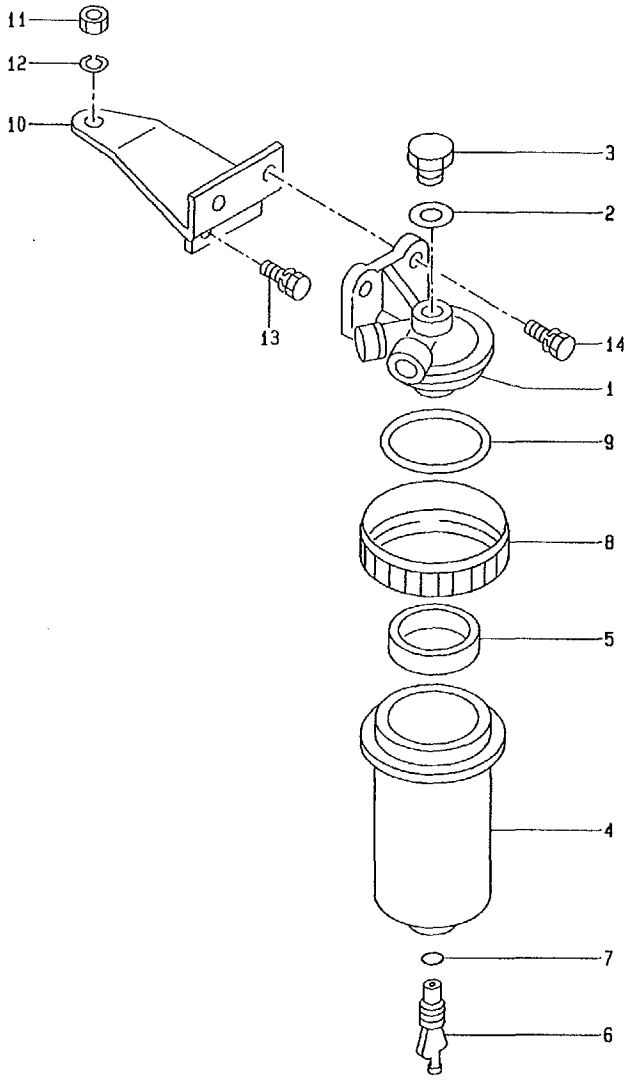

A: A-6BG1QC
B: A-6BG1TQC
C: A-6BG1QC02
D: A-6BG1QC03
E: A-6BG1QC05
F: A-6BG1QC06
G: A-6BG1QC07
H: A-6BG1QC08
J: A-6BG1QC09
K: A-6BG1QC05S

No.	Part No.	Description	Req'd	Remarks • Serial No.
A	Z-1-13200-841-0	SEDIMENTER	1	A,B
				INC.1-9
1	Z-5-13212-059-1	COVER	1	A,B
2	Z-5-09630-024-0	PACKING	1	A,B
3	Z-5-13219-020-0	BOLT	1	A,B
4	Z-1-13211-211-0	CASE	1	A,B
5	Z-5-13219-021-0	FLOAT	1	A,B
6	Z-8-94453-746-0	PLUG	1	A,B
				INC.7
7	Z-8-94416-377-0	PACKING	1	A,B
8	Z-5-13619-022-1	RING	1	A,B
				RETAINER
9	Z-5-09623-070-0	O-RING	1	A,B
10	Z-1-19755-094-1	BRACKET	1	A,B
11	Z-9-0911-0510-0	NUT	1	A,B
12	Z-9-0915-0510-0	WASHER	1	A,B
13	Z-0-5014-0818-0	BOLT	2	A,B
				-1997.7
-	Z-0-2808-0816-0	BOLT	2	A,B
				1997.8-
14	Z-0-5014-0825-0	BOLT	2	A,B
				-1997.7
-	Z-0-2808-0825-0	BOLT	2	A,B
				1997.8-

I-10 NOZZLE & NOZZLE HOLDER
(EZA61740)

A: A-6BG1QC
B: A-6BG1TQC
C: A-6BG1QC02
D: A-6BG1QC03
E: A-6BG1QC05
F: A-6BG1QC06
G: A-6BG1QC07
H: A-6BG1QC08
J: A-6BG1QC09
K: A-6BG1QC05S

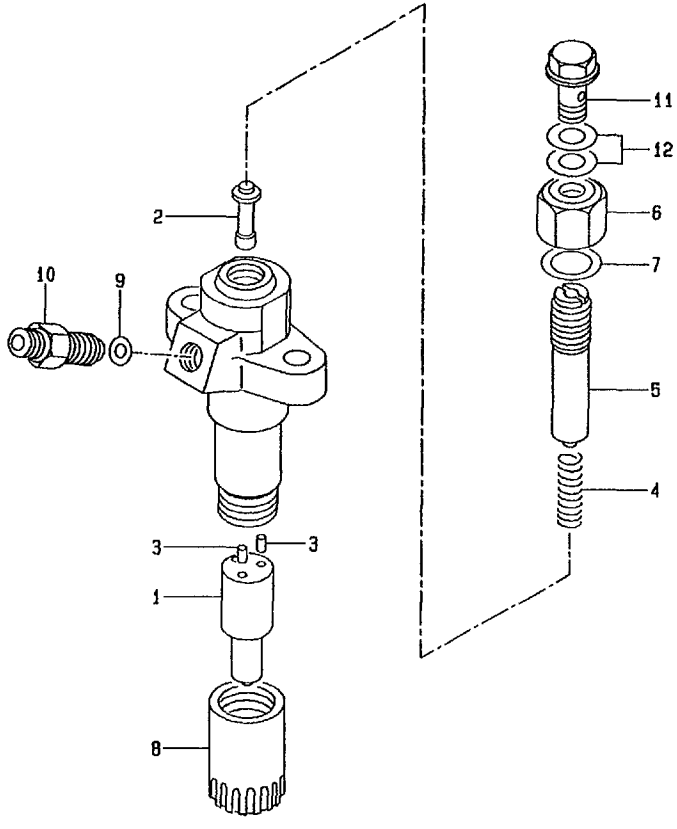

No.	Part No.	Description	Req'd	Remarks • Serial No.
A1	Z-1-15300-291-2	NOZZLE	6	A
				INC.1-12
A2	Z-1-15300-331-0	NOZZLE	6	B
				INC.1-12
A3	Z-1-15300-375-0	NOZZLE	6	C,D,J
				INC.1-12
A4	Z-8-97030-285-1	NOZZLE	6	E,F,G,H,K
				INC.1-12
1	Z-5-15311-027-0	NOZZLE	6	A,C,D,J
-	Z-1-15311-263-0	NOZZLE	6	B
-	Z-5-15311-019-0	NOZZLE	6	E,F,G,H,K
A5	Z-8-97016-147-1	HOLDER	6	INC.2-12
2	Z-8-94169-502-0	ROD,PUSH	6	
3	Z-9-15347-003-0	PIN	12	HOLDER
4	Z-5-15343-005-0	SPRING	6	
5	Z-8-94169-503-0	SCREW	6	
6	Z-5-15332-006-0	NUT	6	CAP
7	Z-5-15339-060-0	GASKET	6	
8	Z-1-15332-017-0	NUT	6	
9	Z-5-51339-003-0	GASKET	6	
10	Z-8-94320-308-0	CONNECTOR	6	
11	Z-1-15339-009-0	BOLT	6	EYE
12	Z-1-09630-082-0	PACKING	12	

I-12 INJECTION PUMP MOUNT (FOR A, B, C, D, J)
(EZA61750)

A: A-6BG1QC
B: A-6BG1TQC
C: A-6BG1QC02
D: A-6BG1QC03
E: A-6BG1QC05
F: A-6BG1QC06
G: A-6BG1QC07
H: A-6BG1QC08
J: A-6BG1QC09
K: A-6BG1QC05S

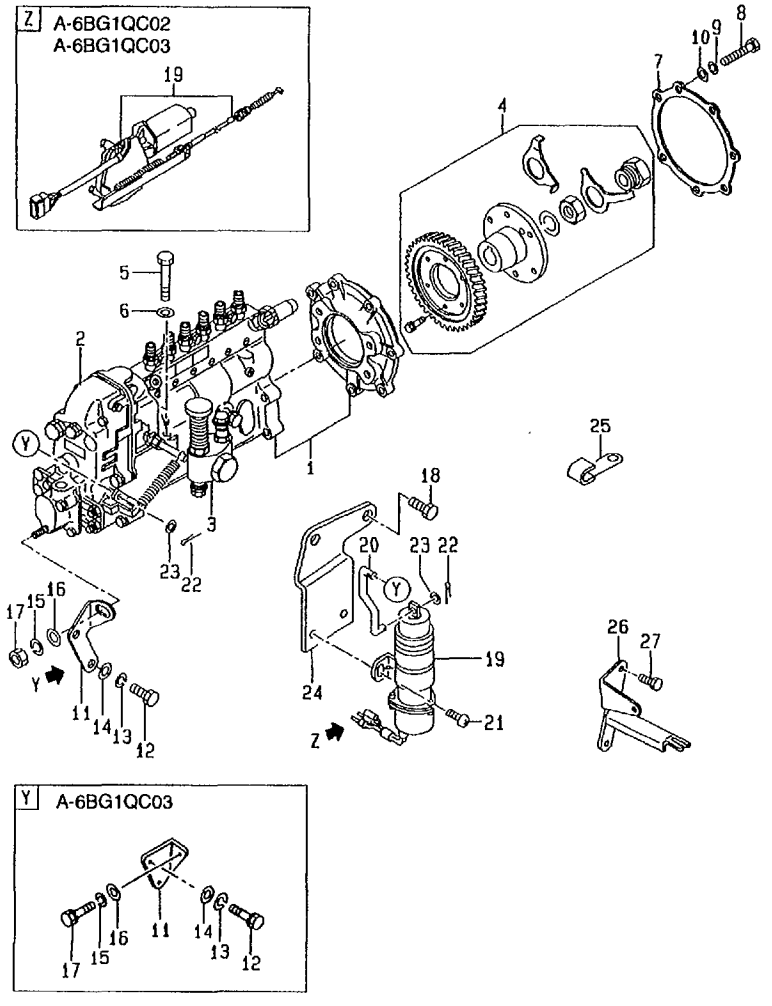

No.	Part No.	Description	Req'd	Remarks • Serial No.
A1	Z-1-15602-969-0	PUMP-ASSY,INJECTION	1	A INC.1-4
A2	Z-1-15603-040-0	PUMP-ASSY,INJECTION	1	B INC.1-4
A3	Z-1-15603-260-0	PUMP-ASSY,INJECTION	1	C,J INC.1-4
A4	Z-1-15603-261-0	PUMP-ASSY,INJECTION	1	D INC.1-4
1	NO PART NO.	PUMP,INJECTION	1	A,B,C,D,J SEE LOC. J-1
2	Z-1-15770-870-0	GOVERNOR	1	A SEE LOC. J-8
-	Z-1-15730-009-0	GOVERNOR	1	B SEE LOC. J-8
-	Z-1-15730-041-0	GOVERNOR	1	C,J SEE LOC. J-8
-	Z-1-15730-042-0	GOVERNOR	1	D SEE LOC. J-8
3	Z-1-15750-162-0	PUMP-ASSY	1	A,C,D,J FEED SEE LOC. J-13
-	Z-1-15750-154-0	PUMP,FEED	1	B SEE LOC. J-13
4	Z-1-15780-172-0	COUPLING	1	A,C,D,J SEE LOC. J-15
-	Z-1-15780-168-0	COUPLING	1	B SEE LOC. J-15
5	Z-0-1081-0875-0	BOLT	4	A
6	Z-9-09851-934-0	WASHER	4	A
7	Z-8-94370-675-0	PACKING	1	A,B,C,D,J
8	Z-0-1081-0860-0	BOLT	7	A,B,C,D,J
9	Z-9-0915-0508-0	WASHER	7	A,B,C,D,J
10	Z-9-0916-0508-0	WASHER	7	A,B,C,D,J
11	Z-5-19751-004-2	BRACKET	1	A,B,C,J
-	Z-1-19751-120-0	BRACKET	1	D
12	Z-0-5004-1020-0	BOLT	2	A,B,C,D,J
13	Z-9-0915-0510-0	WASHER	2	A,B,C,D,J
14	Z-9-0916-0710-0	WASHER	2	A,B,C,D,J
15	Z-9-0915-0510-0	WASHER	1	A,B,C,D,J
16	Z-9-0916-0710-0	WASHER	1	A,B,C,D,J

I-13 INJECTION PUMP MOUNT (FOR A, B, C, D, J)
(EZA61750)

A: A-6BG1QC
B: A-6BG1TQC
C: A-6BG1QC02
D: A-6BG1QC03
E: A-6BG1QC05
F: A-6BG1QC06
G: A-6BG1QC07
H: A-6BG1QC08
J: A-6BG1QC09
K: A-6BG1QC05S

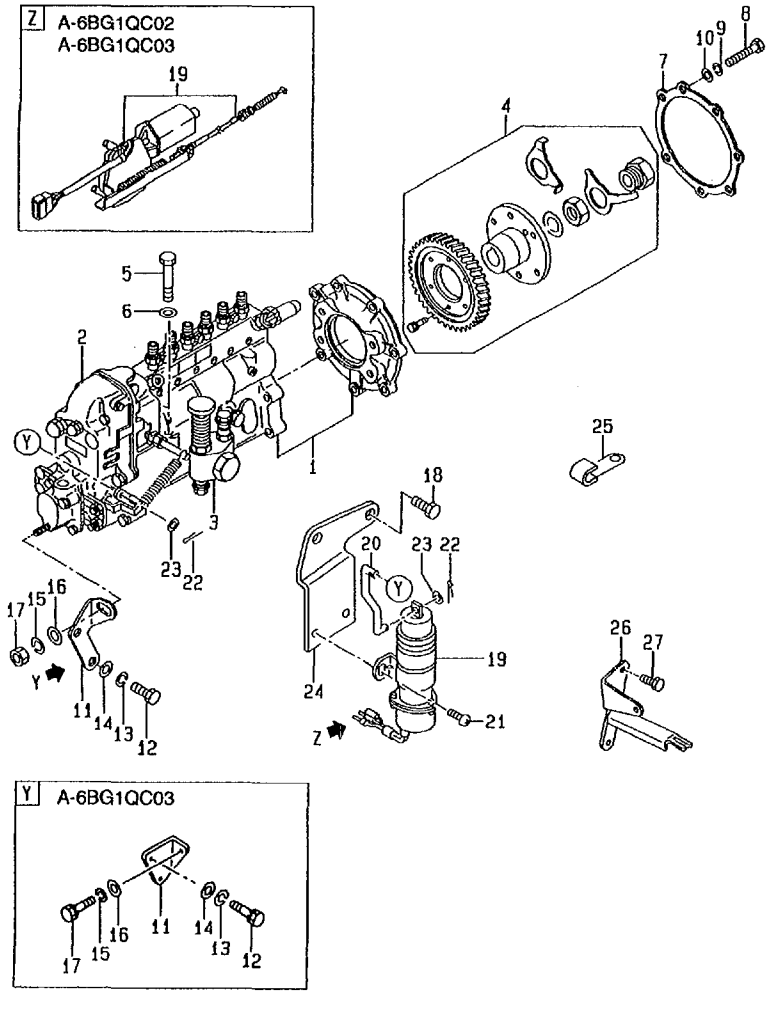

No.	Part No.	Description	Req'd	Remarks · Serial No.
17	Z-9-0911-0410-0	NUT	1	A,B,C,J
-	Z-0-5004-1025-0	BOLT	1	D
18	Z-0-5004-1020-0	BOLT	2	A,B -1997.7
-	Z-0-2808-1020-0	BOLT	2	A,B 1997.8-
19	Z-1-81910-052-0	SOLENOID VALVE	1	A,B
-	Z-1-81900-137-2	STOP ENGINE	1	C,D,J
20	Z-1-23314-122-0	ROD LINK	1	A,B
21	Z-9-0392-0614-0	SCREW	2	A,B
22	Z-9-0811-1612-0	PIN SPLIT	2	A,B
23	Z-9-0916-0506-0	WASHER	2	A,B
24	Z-1-23335-477-0	BRACKET	1	B -1996.6
-	Z-1-23335-188-1	BRACKET	1	B 1996.7-
-	Z-1-23335-188-1	BRACKET	1	A
25	Z-1-09700-453-0	CLIP	1	B
26	Z-5-19789-003-0	BRACKET	1	C,D,J
27	Z-0-2868-1020-0	BOLT	2	C,D,J

I-15 INJECTION PUMP MOUT (FOR E, F, G, H, K)
(EZA617A0)

A: A-6BG1QC
B: A-6BG1TQC
C: A-6BG1QC02
D: A-6BG1QC03
E: A-6BG1QC05
F: A-6BG1QC06
G: A-6BG1QC07
H: A-6BG1QC08
J: A-6BG1QC09
K: A-6BG1QC05S

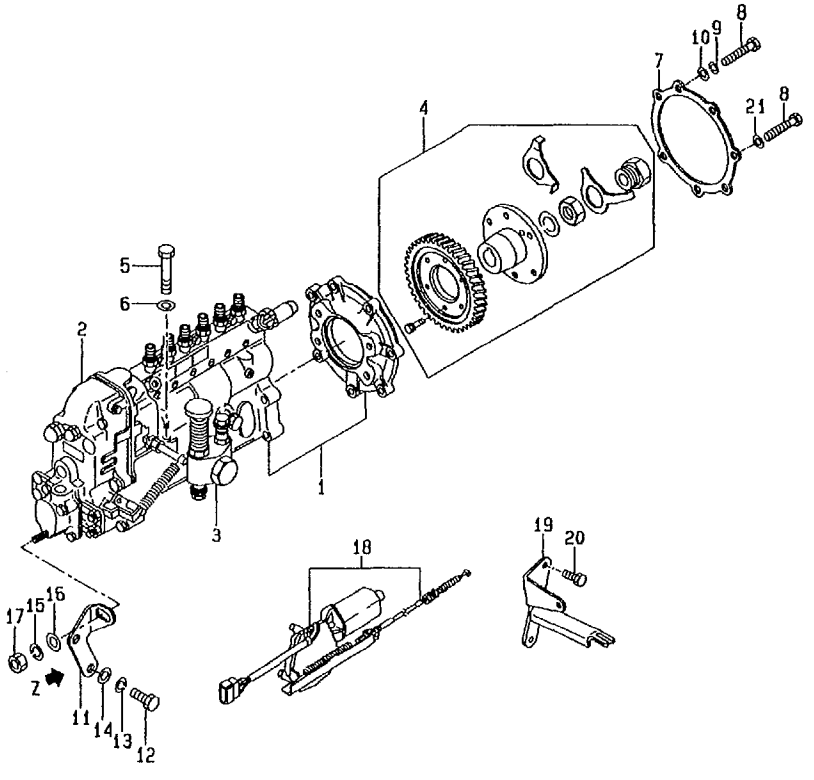

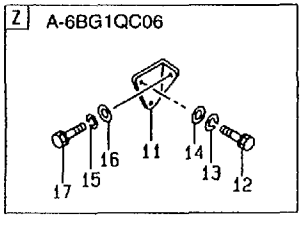

No.	Part No.	Description	Req'd	Remarks • Serial No.
A1	Z-1-15603-300-0	PUMP,INJECTION	1	E,H,K INC.1-4
A2	Z-1-15603-301-0	PUMP,INJECTION	1	F INC.1-4
A3	Z-1-15603-302-0	PUMP,INJECTION	1	G INC.1-4
1	NO PART NO.	PUMP,INJECTION	1	E,F,G,H,K SEE LOC. J-1
2	Z-1-15730-041-0	GOVERNOR	1	E,G,H,K SEE LOC. J-8
-	Z-1-15730-055-0	GOVERNOR	1	F SEE LOC. J-8
3	Z-1-15750-162-0	PUMP-ASSY	1	E,F,G,H,K FEED SEE LOC. J-13
4	Z-1-15780-172-0	COUPLING	1	E,F,G,H,K SEE LOC. J-15
5	Z-0-1081-0875-0	BOLT	4	G
6	Z-9-09851-934-0	WASHER	4	G
7	Z-8-94370-675-0	PACKING	1	E,F,G,H,K
8	Z-0-1081-0860-0	BOLT	7	E,F,H,K
-	Z-5-09000-222-1	BOLT	1	G
-	Z-0-1080-5860-0	BOLT	6	G
9	Z-9-0915-0508-0	WASHER	7	E,F,H,K
-	Z-9-0915-0508-0	WASHER	6	G
10	Z-9-0916-0508-0	WASHER	7	E,F,H,K
-	Z-9-0916-0508-0	WASHER	6	G
11	Z-5-19751-004-2	BRACKET	1	E,G,H,K
-	Z-1-19751-120-0	BRACKET	1	F
12	Z-0-5004-1020-0	BOLT	2	E,F,G,H,K
13	Z-9-0915-0510-0	WASHER	2	E,F,G,H,K
14	Z-9-0916-0710-0	WASHER	2	E,F,G,H,K
15	Z-9-0915-0510-0	WASHER	1	E,F,G,H,K
16	Z-9-0916-0710-0	WASHER	1	E,F,G,H,K
17	Z-9-0911-0410-0	NUT	1	E,G,H,K
-	Z-0-5004-1025-0	BOLT	1	F
18	Z-1-81900-137-2	STOP	1	E,F,G,H,K ENGINE
19	Z-5-19789-003-0	BRACKET	1	E,F,G,H,K
20	Z-0-2868-1020-0	BOLT	2	E,F,G,H,K
21	Z-9-0957-2008-0	PACKING	1	G

J-1 INJECTION PUMP(INNER PARTS)

(EZA61760)

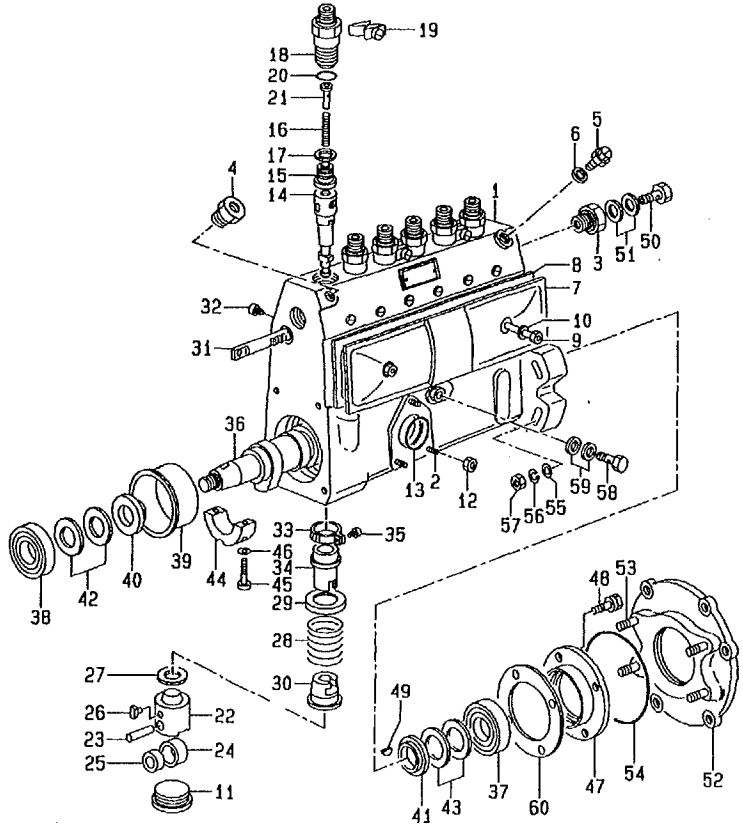

A: A-6BG1QC
B: A-6BG1TQC
C: A-6BG1QC02
D: A-6BG1QC03
E: A-6BG1QC05
F: A-6BG1QC06
G: A-6BG1QC07
H: A-6BG1QC08
J: A-6BG1QC09
K: A-6BG1QC05S

No.	Part No.	Description	Req'd	Remarks・Serial No.
1	Z-5-15611-025-0	HOUSING	1	A,C,D,E,F,G,H,J,K
				INC.2-6
-	Z-1-15611-184-0	HOUSING	1	B
				INC.2-5
2	Z-9-81215-115-0	STUD	3	
3	Z-9-81235-017-0	ADAPTER	1	
4	Z-5-15619-044-0	ADAPTER	1	A,C,D,E,F,G,H,J,K
-	Z-1-15619-190-0	ADAPTER	1	B
5	Z-1-15619-024-0	BOLT	1	A,C,D,E,F,G,H,J,K
-	Z-1-15619-191-0	BOLT	1	B
6	Z-8-94144-588-0	GASKET	1	A,C,D,E,F,G,H,J,K
7	Z-1-15612-050-0	COVER	1	INC.8
8	Z-1-15729-960-0	GASKET	1	
9	Z-1-15619-003-0	SCREW	2	
10	Z-9-81215-144-0	GASKET	2	
11	Z-5-15619-136-0	PLUG	6	A,C,D,E,F,G,H,J,K
-	Z-5-15619-160-0	PLUG	6	B
12	Z-8-94171-110-0	NUT	3	
13	Z-1-09623-013-0	O-RING	1	
14	Z-8-97026-750-0	PLUNGER	6	A
-	Z-8-97041-664-0	PLUNGER	6	B
-	Z-1-15631-069-0	PLUNGER	6	C,D,E,F,G,H,J,K
15	Z-8-94149-756-0	VALVE,DELIVERY	6	A
-	Z-1-15641-031-0	VALVE,DELIVERY	6	B
-	Z-8-97146-824-0	VALVE,DELIVERY	6	C,D,E,F,G,H,J,K
16	Z-5-15643-001-0	SPRING	6	A,C,D,E,F,G,H,J,K
-	Z-1-15634-011-0	SPRING	6	B
17	Z-1-15649-001-0	GASKET	6	A,C,D,E,F,G,H,J,K
-	Z-1-15619-103-0	GASKET	6	B
18	Z-5-15644-017-0	HOLDER	6	A,C,D,E,F,G,H,J,K
-	Z-1-15644-009-0	HOLDER	6	B
19	Z-5-15625-001-0	PLATE	3	
20	Z-1-09623-052-0	O-RING	6	A,C,D,E,F,G,H,J,K
-	Z-9-81235-046-0	O-RING	6	B
21	Z-5-15629-045-0	STOPPER	6	A,C,D,E,F,G,H,J,K
-	Z-1-15649-005-0	STOPPER	6	B
22	Z-9-81221-223-0	TAPEET	6	A,C,D,E,F,G,H,J,K
				INC.23-26
-	Z-1-15622-006-0	TAPEET	6	B
				INC.23-26

J-2 INJECTION PUMP(INNER PARTS)

(EZA61760)

A: A-6BG1QC
B: A-6BG1TQC
C: A-6BG1QC02
D: A-6BG1QC03
E: A-6BG1QC05
F: A-6BG1QC06
G: A-6BG1QC07
H: A-6BG1QC08
J: A-6BG1QC09
K: A-6BG1QC05S

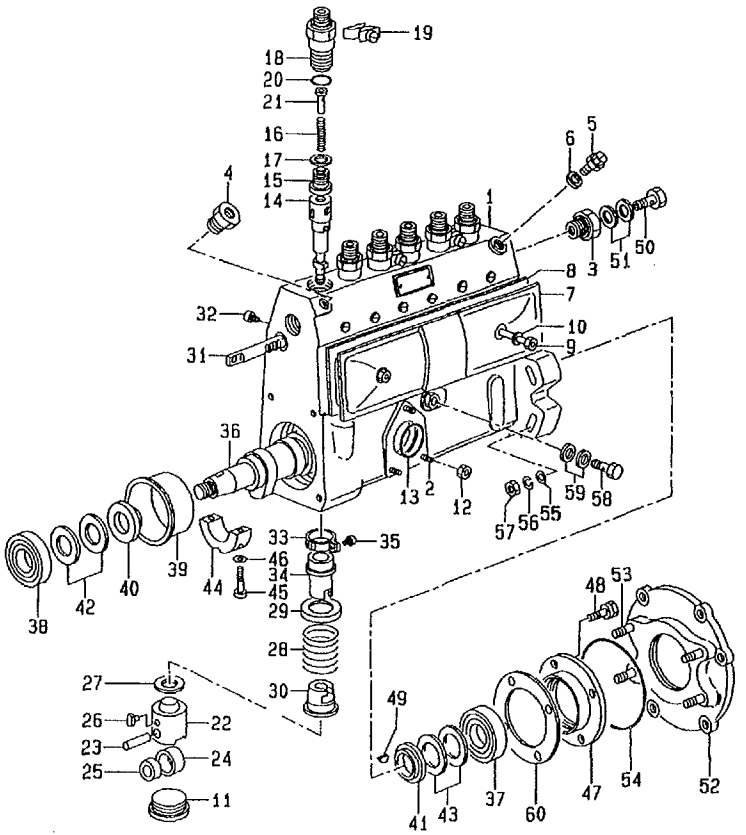

No.	Part No.	Description	Req'd	Remarks・Serial No.
23	Z-9-81222-220-0	PIN	6	A,C,D,E,F,G,H,J,K
-	Z-9-81215-185-0	PIN	6	B
24	Z-1-15622-003-0	ROLLER	6	A,C,D,E,F,G,H,J,K
-	Z-1-15629-010-0	ROLLER	6	B
25	Z-1-15629-001-0	BUSHING	6	A,C,D,E,F,G,H,J,K
-	Z-1-15619-162-0	BUSHING	6	B
26	Z-5-15619-041-0	GUIDE	6	A,C,D,E,F,G,H,J,K
-	Z-1-15629-018-0	GUIDE	6	B
27	Z-5-15619-034-0	SHIM	AR	t=0.30mm
-	Z-5-15619-035-0	SHIM	AR	t=0.40mm
-	Z-5-15619-036-0	SHIM	AR	t=0.50mm
-	Z-5-15619-001-0	SHIM	AR	t=0.60mm
-	Z-5-15619-002-0	SHIM	AR	t=0.70mm
-	Z-5-15619-003-0	SHIM	AR	t=0.80mm
-	Z-5-15619-004-0	SHIM	AR	t=0.90mm
-	Z-5-15619-005-0	SHIM	AR	t=1.00mm
-	Z-5-15619-007-0	SHIM	AR	t=1.10mm
-	Z-5-15619-008-0	SHIM	AR	t=1.20mm
-	Z-5-15619-009-0	SHIM	AR	t=1.30mm
-	Z-5-15619-010-0	SHIM	AR	t=1.40mm
-	Z-5-15619-011-0	SHIM	AR	t=0.55mm
-	Z-5-15619-012-0	SHIM	AR	t=0.65mm
-	Z-5-15619-013-0	SHIM	AR	t=0.75mm
-	Z-5-15619-015-0	SHIM	AR	t=0.85mm
-	Z-9-81235-042-0	SHIM	AR	t=0.95mm
-	Z-9-81235-043-0	SHIM	AR	t=1.05mm
-	Z-9-81235-044-0	SHIM	AR	t=1.15mm
-	Z-9-81235-045-0	SHIM	AR	t=1.25mm
-	Z-5-15619-106-0	SHIM,T-1.5	AR	t=1.50mm
-	Z-5-15619-107-0	SHIM,T-1.6	AR	t=1.60mm
-	Z-5-15619-025-0	GASKET	AR	t=0.20mm
-	Z-5-15619-026-0	SHIM	AR	t=0.25mm
-	Z-5-15619-027-0	SHIM	AR	t=0.35mm
-	Z-5-15619-037-0	SHIM	AR	t=0.45mm
-	Z-5-15619-108-0	SHIM,T-1.35	AR	t=1.35mm
-	Z-5-15619-109-0	SHIM,T-1.45	AR	t=1.45mm
-	Z-5-15619-110-0	SHIM,T-1.55	AR	t=1.55mm
28	Z-5-15643-009-0	SPRING	6	A,C,D,E,F,G,H,J,K
				PLUNGER

J-3 INJECTION PUMP(INNER PARTS)

(EZA61760)

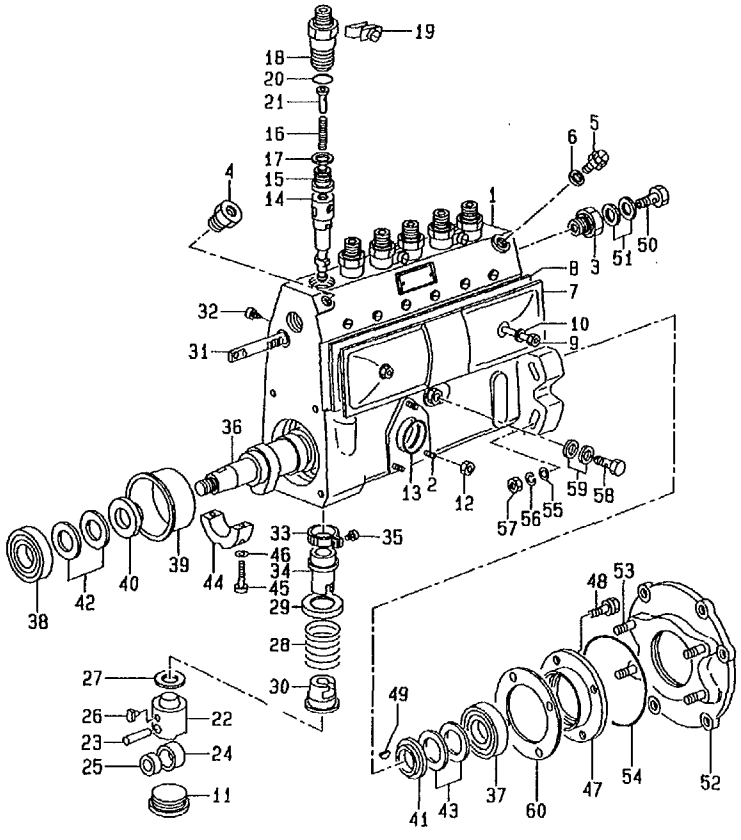

A: A-6BG1QC
B: A-6BG1TQC
C: A-6BG1QC02
D: A-6BG1QC03
E: A-6BG1QC05
F: A-6BG1QC06
G: A-6BG1QC07
H: A-6BG1QC08
J: A-6BG1QC09
K: A-6BG1QC05S

No.	Part No.	Description	Req'd	Remarks • Serial No.
28	Z-1-15634-007-0	SPRING	6	B PLUNGER
29	Z-9-81235-015-0	SEAT	6	A,C,D,E,F,G,H,J,K SPRING
-	Z-1-15639-022-0	SEAT	6	B SPRING
30	Z-9-81235-021-0	SEAT	6	A,C,D,E,F,G,H,J,K SPRING
-	Z-1-15639-023-0	SEAT	6	B SPRING
31	Z-5-15637-003-0	RACK,CONTROL	1	
32	Z-1-15639-003-0	SCREW	1	
33	Z-9-81225-057-0	PINION	6	
34	Z-9-81225-058-0	SLEEVE	6	A,C,D,E,F,G,H,J,K CONTROL
-	Z-9-81231-523-0	SLEEVE	6	B CONTROL
35	Z-9-81235-003-0	SCREW	6	
36	Z-5-15621-025-0	SHAFT	1	A,C,D,E,F,G,H,J,K CAM
-	Z-1-15621-070-0	CAMSHAFT	1	B
37	Z-5-09800-038-0	BRG,BALL	1	A,C,D,E,F,G,H,J,K NTN MAKE
-	Z-9-00090-677-0	BRG,BALL	1	A,C,D,E,F,G,H,J,K NSK MAKE
-	Z-1-15629-003-0	BRG	1	B NTN MAKE
-	Z-1-15629-002-0	BRG	1	B NSK MAKE
38	Z-9-00090-677-0	BRG,BALL	1	 NSK MAKE
-	Z-5-09800-038-0	BRG,BALL	1	 NTN MAKE
39	Z-1-15629-015-0	RING	1	B
40	Z-9-81225-047-0	RING	1	A,C,D,E,F,G,H,J,K
-	Z-9-81225-059-0	RING	1	B
41	Z-9-81225-047-0	RING	1	A,C,D,E,F,H,J,K
-	Z-1-15629-004-0	RING	1	B,G
42	Z-5-15629-015-0	SHIM	AR	t=0.10mm

J-4 INJECTION PUMP(INNER PARTS)
(EZA61760)

A: A-6BG1QC
B: A-6BG1TQC
C: A-6BG1QC02
D: A-6BG1QC03
E: A-6BG1QC05
F: A-6BG1QC06
G: A-6BG1QC07
H: A-6BG1QC08
J: A-6BG1QC09
K: A-6BG1QC05S

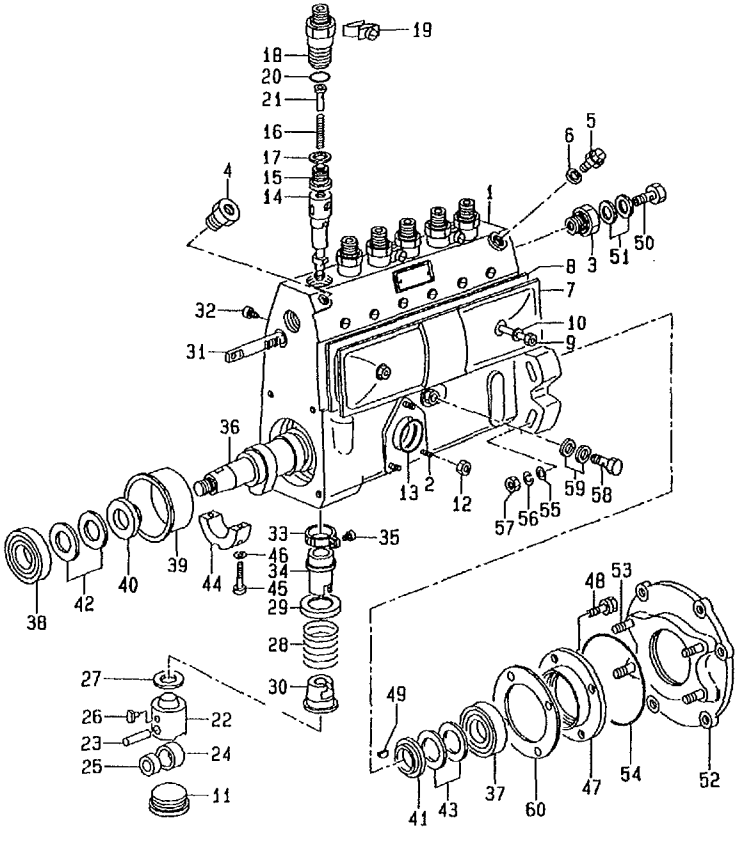

No.	Part No.	Description	Req'd	Remarks・Serial No.
42	Z-5-15629-016-0	SHIM	AR	t=0.12mm
-	Z-5-15629-017-0	SHIM	AR	t=0.14mm
-	Z-5-15629-018-0	SHIM	AR	t=0.16mm
-	Z-5-15629-019-0	SHIM	AR	t=0.18mm
-	Z-5-15629-020-0	SHIM	AR	t=0.50mm
-	Z-5-15629-038-0	SHIM	AR	t=1.00mm
-	Z-9-81225-033-0	SHIM	AR	t=0.30mm
-	Z-5-15619-039-0	SHIM	AR	t=0.70mm
-	Z-5-15629-090-0	SHIM	AR	t=1.40mm
-	Z-1-15639-088-0	SHIM	AR	t=2.40mm
43	Z-5-15629-015-0	SHIM	AR	A,C,D,E,F,G,H,J,K t=0.10mm
-	Z-5-15629-016-0	SHIM	AR	A,C,D,E,F,G,H,J,K t=0.12mm
-	Z-5-15629-017-0	SHIM	AR	A,C,D,E,F,G,H,J,K t=0.14mm
-	Z-5-15629-018-0	SHIM	AR	A,C,D,E,F,G,H,J,K t=0.16mm
-	Z-5-15629-019-0	SHIM	AR	A,C,D,E,F,G,H,J,K t=0.18mm
-	Z-5-15629-020-0	SHIM	AR	A,C,D,E,F,G,H,J,K t=0.50mm
-	Z-5-15629-038-0	SHIM	AR	A,C,D,E,F,G,H,J,K t=1.00mm
-	Z-9-81225-033-0	SHIM	AR	A,C,D,E,F,G,H,J,K t=0.30mm
-	Z-5-15619-039-0	SHIM	AR	A,C,D,E,F,G,H,J,K t=0.70mm
-	Z-5-15629-090-0	SHIM	AR	A,C,D,E,F,G,H,J,K t=1.40mm
-	Z-1-15639-088-0	SHIM	AR	A,C,D,E,F,G,H,J,K t=2.40mm
-	Z-9-81225-049-0	SHIM	AR	B t=0.10mm
-	Z-9-81225-050-0	SHIM	AR	B t=0.12mm
-	Z-9-81225-051-0	SHIM	AR	B t=0.14mm
-	Z-9-81225-052-0	SHIM	AR	B t=0.16mm

J-5 INJECTION PUMP(INNER PARTS)
(EZA61760)

A: A-6BG1QC
B: A-6BG1TQC
C: A-6BG1QC02
D: A-6BG1QC03
E: A-6BG1QC05
F: A-6BG1QC06
G: A-6BG1QC07
H: A-6BG1QC08
J: A-6BG1QC09
K: A-6BG1QC05S

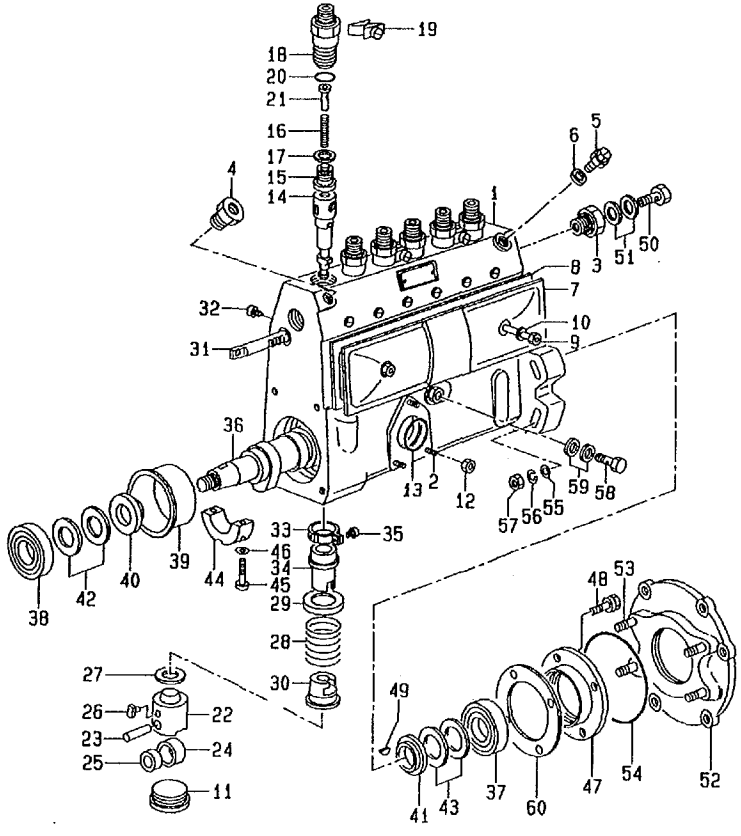

No.	Part No.	Description	Req'd	Remarks・Serial No.
43	Z-9-81225-053-0	SHIM	AR	B t=0.18mm
-	Z-9-81225-054-0	SHIM	AR	B t=0.50mm
-	Z-1-15629-007-0	SHIM	AR	B t=0.30mm
-	Z-1-15629-008-0	SHIM	AR	B t=1.00mm
-	Z-1-15629-105-0	SHIM	AR	B t=0.70mm
44	Z-1-15619-033-0	METAL	1	A,C,D,E,F,G,H,J,K
-	Z-1-15619-237-0	BRG	1	B CENTER
45	Z-9-8841-0066-0	SCREW	2	A,C,D,E,F,G,H,J,K
-	Z-1-15629-017-0	SCREW	2	B
46	Z-9-81225-043-0	GASKET	2	
47	Z-1-15619-243-0	COVER	1	A,C,D,E,F,G,H,J,K
-	Z-1-15629-047-0	COVER	1	B
48	Z-9-0190-0614-0	BOLT	4	A,C,D,E,F,G,H,J,K
-	Z-1-15619-282-0	BOLT	4	B
49	Z-5-15619-049-0	KEY	1	A,C,D,E,F,G,H,J,K WOODRUFF
-	Z-5-83539-024-0	KEY	1	B WOODRUFF
50	Z-1-15759-011-0	BOLT,EYE	1	A,C,D,E,F,G,H,J,K
51	Z-1-09630-085-0	PACKING	2	A,C,D,E,F,G,H,J,K
52	Z-1-19751-049-0	BRACKET	1	A,C,D,E,F,H,J,K INC.53
-	Z-1-15619-326-0	BRACKET	1	B INC.53
-	Z-5-19751-050-0	BRACKET	1	G INC.53
53	Z-9-0410-1030-0	STUD	4	
54	Z-5-15619-156-0	O-RING	1	A,C,D,E,F,G,H,J,K
-	Z-5-15629-049-0	O-RING	1	B
55	Z-9-0916-4510-0	WASHER	4	
56	Z-9-0915-0610-0	WASHER	4	
57	Z-5-15639-002-0	NUT	4	
58	Z-1-15619-092-0	BOLT	1	EYE
59	Z-1-15719-093-0	GASKET	2	

J-6 INJECTION PUMP(INNER PARTS)

(EZA61760)

A: A-6BG1QC
B: A-6BG1TQC
C: A-6BG1QC02
D: A-6BG1QC03
E: A-6BG1QC05
F: A-6BG1QC06
G: A-6BG1QC07
H: A-6BG1QC08
J: A-6BG1QC09
K: A-6BG1QC05S

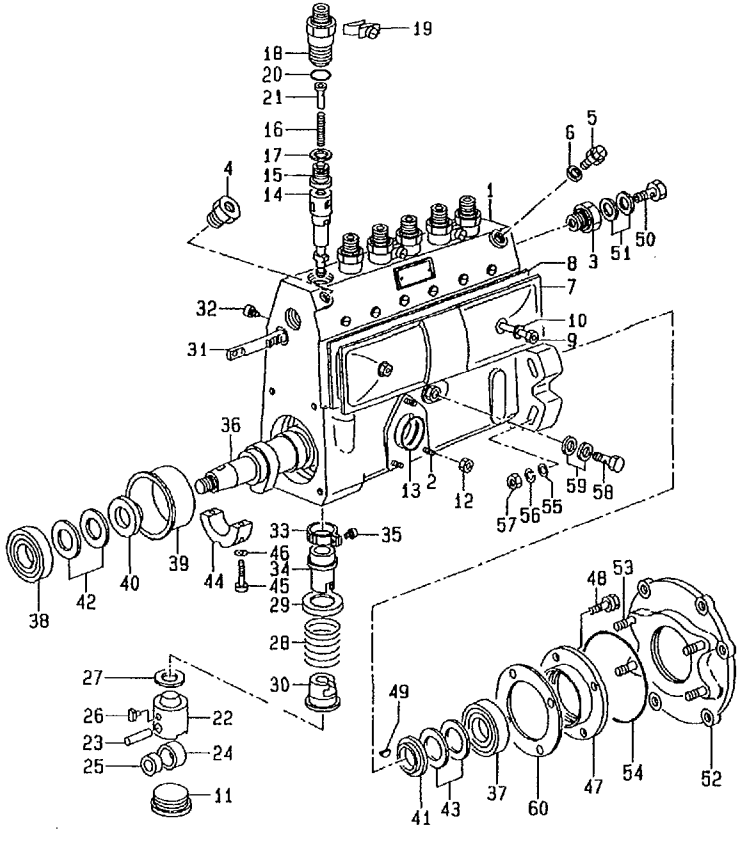

No.	Part No.	Description	Req'd	Remarks • Serial No.
60	Z-8-97083-337-0	GASKET	2	B

J-8 GOVERNOR
(EZA61770)

A: A-6BG1QC
B: A-6BG1TQC
C: A-6BG1QC02
D: A-6BG1QC03
E: A-6BG1QC05
F: A-6BG1QC06
G: A-6BG1QC07
H: A-6BG1QC08
J: A-6BG1QC09
K: A-6BG1QC05S

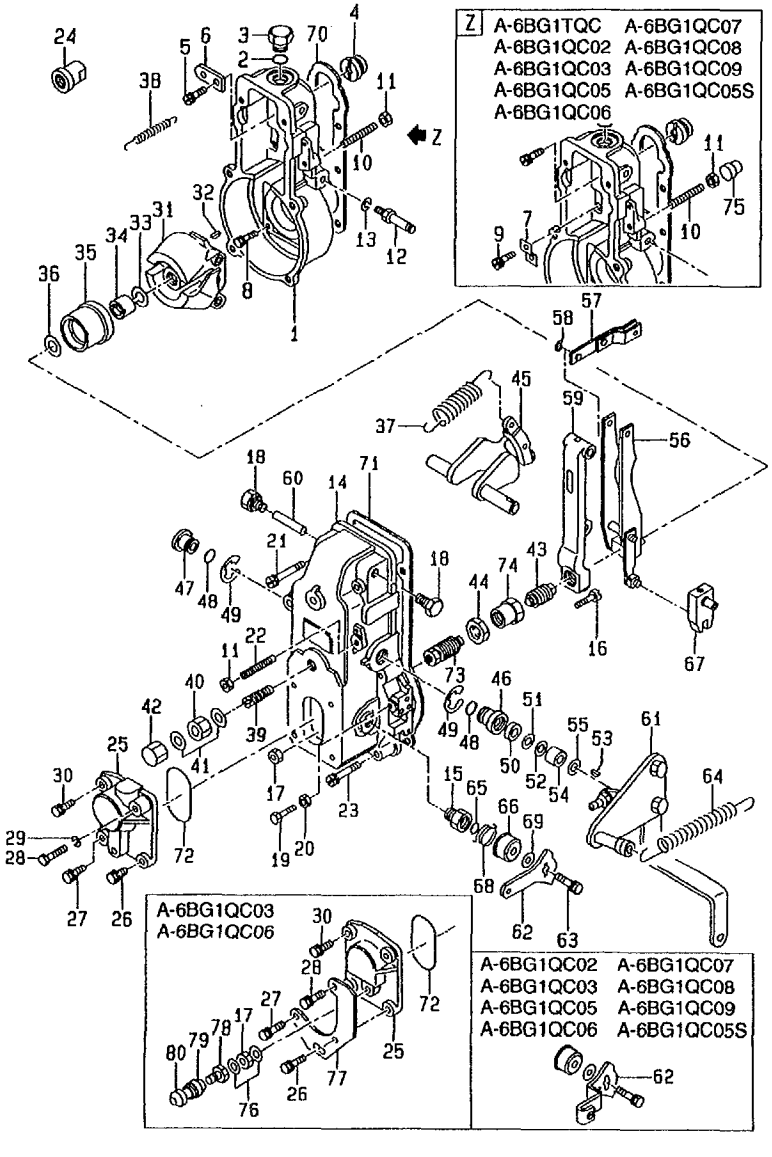

No.	Part No.	Description	Req'd	Remarks・Serial No.
A1	Z-1-15770-870-0	GOVERNOR	1	A
				INC.1-74
A2	Z-1-15730-009-0	GOVERNOR	1	B
				INC.1-75
A3	Z-1-15730-041-0	GOVERNOR	1	C,E,G,H,J,K
				INC.1-72
A4	Z-1-15730-042-0	GOVERNOR	1	D
				INC.1-80
A5	Z-1-15730-055-0	GOVERNOR	1	F
				INC.1-80
1	Z-5-15721-004-0	HOUSING	1	
2	Z-1-15729-015-0	O-RING	1	
3	Z-1-15729-038-0	PLUG	1	
4	Z-9-81315-065-0	ADAPTER	1	
5	Z-9-0190-0818-0	BOLT	1	
6	Z-8-91325-397-0	PLATE	1	A
7	Z-9-81325-391-0	PLATE	1	B,C,D,E,F,G,H,J,K
8	Z-5-15729-027-0	BOLT	6	A
-	Z-5-15729-027-0	BOLT	5	B,C,D,E,F,G,H,J,K
9	Z-5-15729-071-0	BOLT	1	B,C,D,E,F,G,H,J,K
10	Z-5-15729-123-0	SCREW	1	A,C,E,G,H,J,K
-	Z-1-15729-644-0	SCREW	1	B
-	Z-1-15729-642-0	SCREW	1	B
-	Z-1-15779-502-0	SCREW	1	D,F
11	Z-9-8441-0027-0	NUT	2	A,C,E,G,H,J,K
-	Z-9-8441-0027-0	NUT	1	B,D,F
-	Z-1-15729-643-0	NUT	1	B
-	Z-1-15779-508-0	NUT	1	D,F
12	Z-8-97138-534-0	BOLT	1	A,C,D,E,F,G,H,J,K
-	Z-1-15729-226-0	BOLT	1	B
13	Z-1-83579-492-0	WASHER	1	
14	Z-5-15721-020-0	COVER	1	A,B,C,E,G,H,J,K
				INC.15
-	Z-5-15721-022-0	COVER	1	D,F
				INC.15
15	Z-9-81325-429-0	BUSHING	1	
16	Z-9-81325-182-0	SCREW	1	A,B,C,E,G,H,J,K
-	Z-1-15729-101-0	SCREW	1	D
-	Z-1-15729-172-0	SCREW	1	F
17	Z-9-81326-112-0	NUT	1	A,B,C,E,G,H,J,K

J-9 GOVERNOR
(EZA61770)

A: A-6BG1QC
B: A-6BG1TQC
C: A-6BG1QC02
D: A-6BG1QC03
E: A-6BG1QC05
F: A-6BG1QC06
G: A-6BG1QC07
H: A-6BG1QC08
J: A-6BG1QC09
K: A-6BG1QC05S

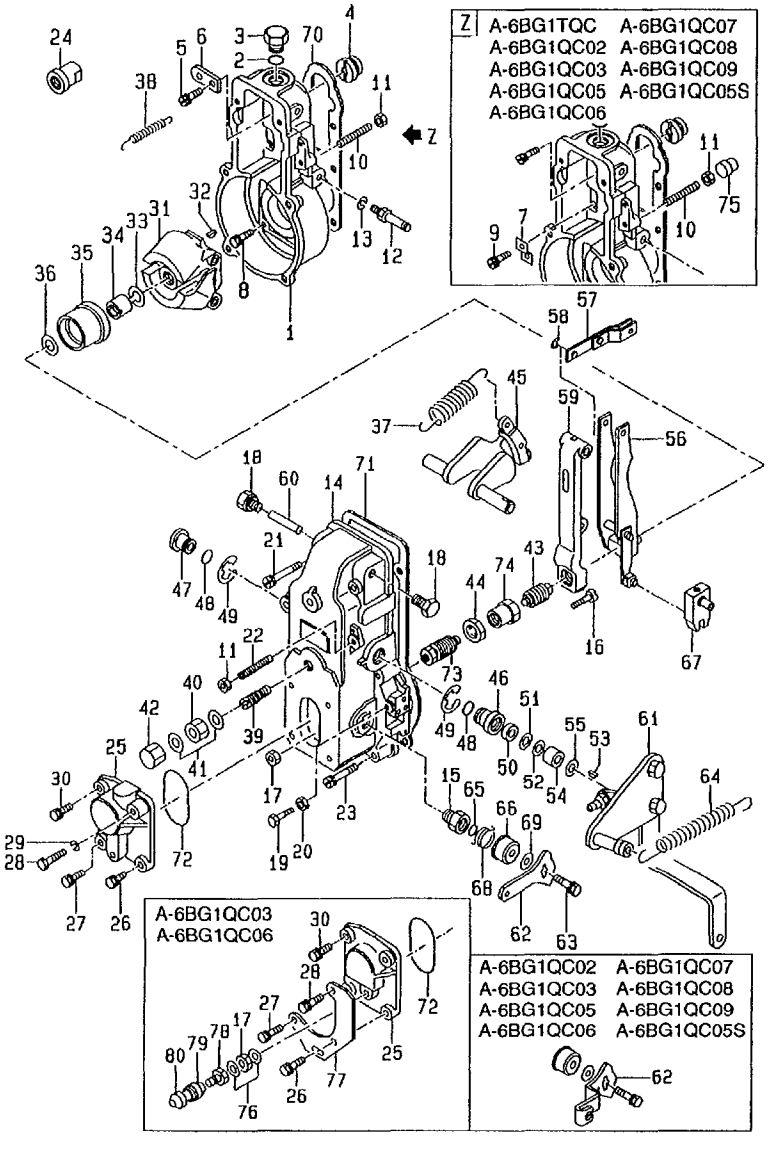

No.	Part No.	Description	Req'd	Remarks · Serial No.
17	Z-1-15779-040-0	NUT	1	D,F
18	Z-5-15729-053-0	PLUG	2	
19	Z-5-15729-102-0	BOLT	1	A,B,C,E,G,H,J,K
20	Z-9-8841-0027-0	NUT	1	A,B,C,E,G,H,J,K
21	Z-5-15729-054-0	BOLT	2	
22	Z-9-81325-177-0	SCREW	1	A
-	Z-5-15729-123-0	SCREW	1	B,C,D,E,F,G,H,J,K
23	Z-5-15729-033-0	BOLT	4	
24	Z-1-15729-636-0	CAP	1	
25	Z-5-15721-026-0	COVER	1	A,B,C,E,G,H,J,K
-	Z-1-15721-023-0	COVER	1	D
-	Z-8-94167-793-0	COVER	1	F
26	Z-9-0190-0616-0	BOLT & WASHER	1	A,B,C,E,G,H,J,K
-	Z-1-15619-282-0	BOLT	1	D,F
27	Z-9-0190-0616-0	BOLT & WASHER	1	A,B,C,E,G,H,J,K
-	Z-1-15619-282-0	BOLT	1	D,F
28	Z-5-15729-124-0	BOLT	1	A,B,C,E,G,H,J,K
-	Z-5-15729-167-0	BOLT	1	D,F
29	Z-9-0915-0506-0	WASHER	1	A,B,C,E,G,H,J,K
30	Z-9-0190-0616-0	BOLT & WASHER	1	
31	Z-5-15722-008-0	FLYWEIGHT	1	A,C,D,E,F,G,H,J,K
-	Z-1-15722-017-0	FLYWEIGHT	1	B
32	Z-5-19619-049-0	KEY	1	
33	Z-5-15729-034-0	WASHER,LOCK	1	
34	Z-9-81325-086-0	NUT	1	
35	Z-5-15719-008-0	SLEEVE	1	
36	Z-9-81325-088-0	SHIM	AR	t=0.20mm
-	Z-9-81325-551-0	SHIM	AR	t=0.30mm
-	Z-9-81325-552-0	SHIM	AR	t=0.40mm
-	Z-9-81325-553-0	SHIM	AR	t=1.00mm
-	Z-5-15729-286-0	SHIM	AR	t=0.50mm
-	Z-5-15729-287-0	SHIM	AR	t=1.50mm
-	Z-1-15729-891-0	SHIM	AR	t=2.00mm
-	Z-1-15729-892-0	SHIM	AR	t=3.00mm
-	Z-1-15729-893-0	SHIM	AR	t=4.00mm
37	Z-5-15723-128-0	SPRING	1	A
-	Z-8-97039-537-0	SPRING	1	C,D,E,F,G,H,J,K
38	Z-9-81322-235-0	SPRING	1	A
-	Z-5-15723-160-0	SPRING	1	B,C,D,E,F,G,H,J,K

J-10 GOVERNOR
(EZA61770)

A: A-6BG1QC
B: A-6BG1TQC
C: A-6BG1QC02
D: A-6BG1QC03
E: A-6BG1QC05
F: A-6BG1QC06
G: A-6BG1QC07
H: A-6BG1QC08
J: A-6BG1QC09
K: A-6BG1QC05S

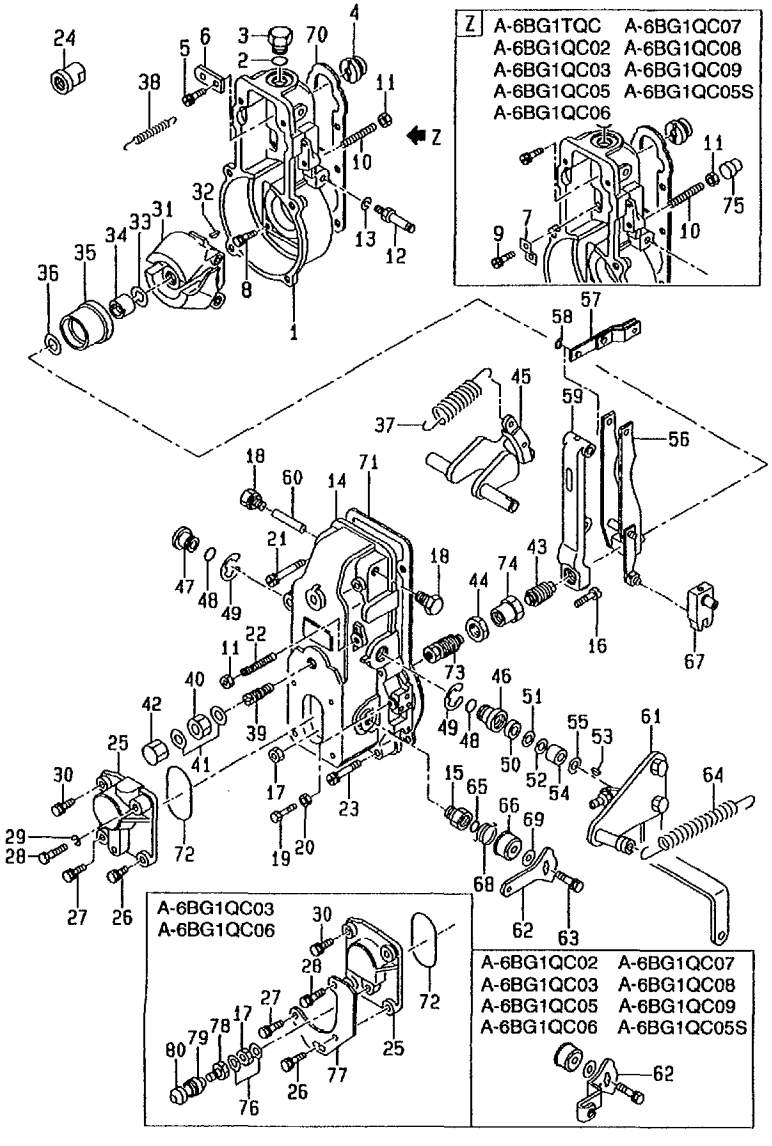

No.	Part No.	Description	Req'd	Remarks · Serial No.
39	Z-1-15631-026-0	CAPSULE	1	A
				SPRING
-	Z-1-15723-284-0	CAPSULE	1	B
				SPRING
-	Z-1-15723-224-0	CAPSULE	1	C,D,E,F,G,H,J,K
40	Z-1-15729-689-0	NUT	1	A,C,D,E,F,G,H,J,K
-	Z-5-15729-209-0	NUT	1	B
41	Z-8-94144-588-0	GASKET	2	
42	Z-1-15729-092-0	NUT	1	CAP
43	Z-1-15723-186-0	CAPSULE	1	A,C,D,E,F,G,H,J,K
				SPRING
-	Z-1-15729-279-0	CAPSULE	1	B
				SPRING
44	Z-9-8841-0037-0	NUT	1	A,B
-	Z-9-00813-023-0	NUT	1	C,D,E,F,G,H,J,K
45	Z-8-97024-238-0	LEVER	1	SWIVEL
46	Z-8-97024-239-0	BUSHING	1	
47	Z-8-97024-240-0	BUSHING	1	
48	Z-9-81321-205-0	O-RING	2	
49	Z-9-0918-5415-0	RING,SNAP	2	
50	Z-1-15729-098-0	SEAL,OIL	1	
51	Z-1-15729-099-0	SHIM	1	
52	Z-9-81325-097-0	SHIM	AR	A,B
				t=0.30mm
-	Z-9-81325-173-0	SHIM	AR	C,D,E,F,G,H,J,K
				t=0.50mm
53	Z-9-81325-030-0	KEY	1	
54	Z-1-15729-301-0	COLLAR	1	
55	Z-9-81325-488-0	WASHER	AR	
56	Z-5-15725-057-0	LEVER	1	GUIDE
57	Z-1-15725-011-0	RING	1	
58	Z-9-0918-5404-0	RING,SNAP	1	
59	Z-5-15725-050-0	LEVER	1	A,C,D,E,F,G,H,J,K
				TENSION
-	Z-8-97063-823-0	LEVER	1	B
				TENSION
60	Z-9-81325-062-0	PIN	1	
61	Z-8-97138-535-0	LEVER	1	A
-	Z-1-15725-344-0	LEVER	1	B
-	Z-1-15725-917-0	LEVER	1	C,D,E,F,G,H,J,K

J-11 GOVERNOR
(EZA61770)

A: A-6BG1QC
B: A-6BG1TQC
C: A-6BG1QC02
D: A-6BG1QC03
E: A-6BG1QC05
F: A-6BG1QC06
G: A-6BG1QC07
H: A-6BG1QC08
J: A-6BG1QC09
K: A-6BG1QC05S

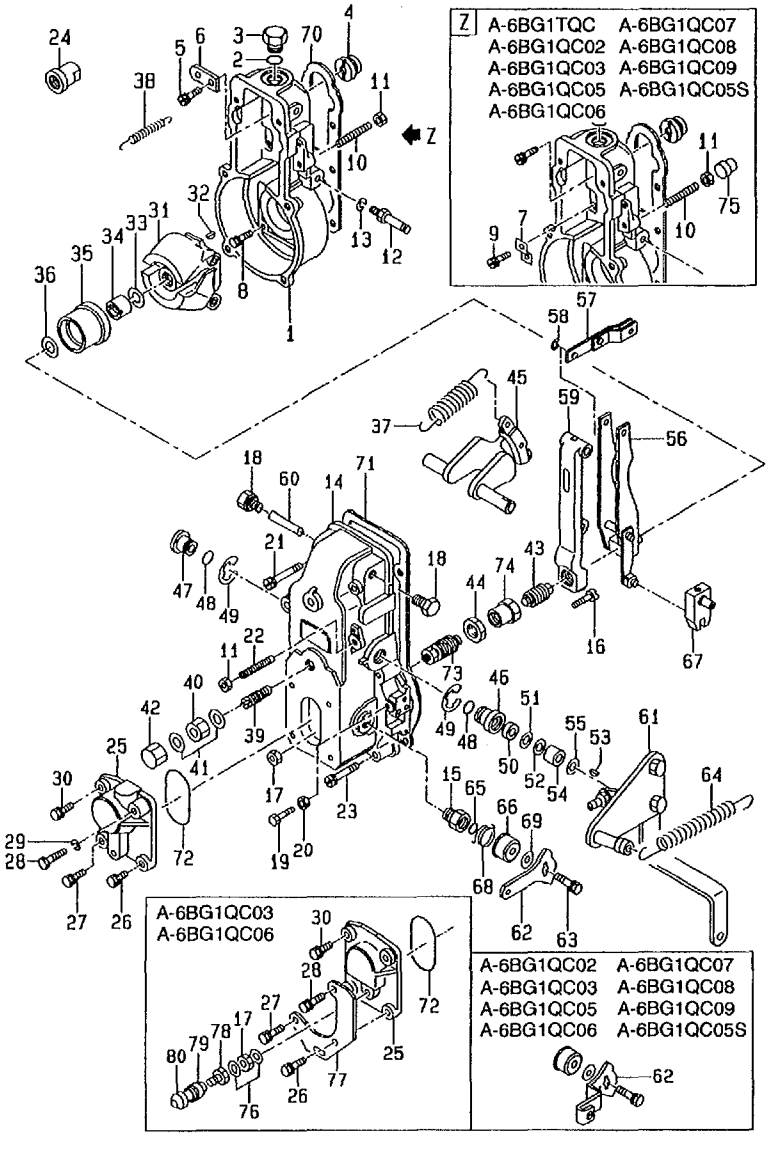

No.	Part No.	Description	Req'd	Remarks · Serial No.
62	Z-5-15725-122-0	LEVER	1	A,B
-	Z-1-15725-449-0	LEVER	1	C,D,E,F,G,H,J,K
63	Z-9-0190-0616-0	BOLT & WASHER	1	
64	Z-1-15723-028-0	SPRING	1	A
-	Z-5-15723-088-0	SPRING	1	B
-	Z-1-15723-223-0	SPRING	1	C,D,E,F,G,H,J,K
65	Z-9-8139-1906-0	O-RING	1	
66	Z-9-81325-210-0	CAP	1	
67	Z-5-15725-042-0	LEVER	1	
68	Z-1-15723-212-0	SPRING	1	
69	Z-1-15729-294-0	SHIM	AR	t=0.20mm
-	Z-1-15729-295-0	SHIM	AR	t=0.25mm
-	Z-1-15729-296-0	SHIM	AR	t=0.30mm
-	Z-1-15729-297-0	SHIM	AR	t=0.35mm
-	Z-1-15729-298-0	SHIM	AR	t=0.40mm
-	Z-1-15729-299-0	SHIM	AR	t=0.50mm
70	Z-1-15729-001-0	GASKET	1	A
-	Z-1-15779-093-0	GASKET	1	B,C,D,E,F,G,H,J,K
71	Z-1-15729-002-0	GASKET	1	A
-	Z-1-15779-094-0	GASKET	1	B,C,D,E,F,G,H,J,K
72	Z-9-8139-1907-0	O-RING	1	
73	Z-1-15723-369-0	CAPSULE	1	A
				SPRING
-	Z-1-15723-432-0	CAPSULE	1	B
				SPRING
74	Z-9-00813-023-0	NUT	1	A,B
75	Z-8-97085-022-0	CAP	1	B
-	Z-8-97179-670-0	CAP	1	D,F
76	Z-5-15729-099-0	GASKET	2	D,F
77	Z-1-15779-191-0	BRACKET	1	D,F
78	Z-1-15779-564-0	NUT	1	D,F
				CAP
79	Z-1-15779-567-0	ADAPTER	1	D,F
80	Z-1-15779-565-0	CAP	1	D,F

J-13 FEED PUMP
(EZA61780)

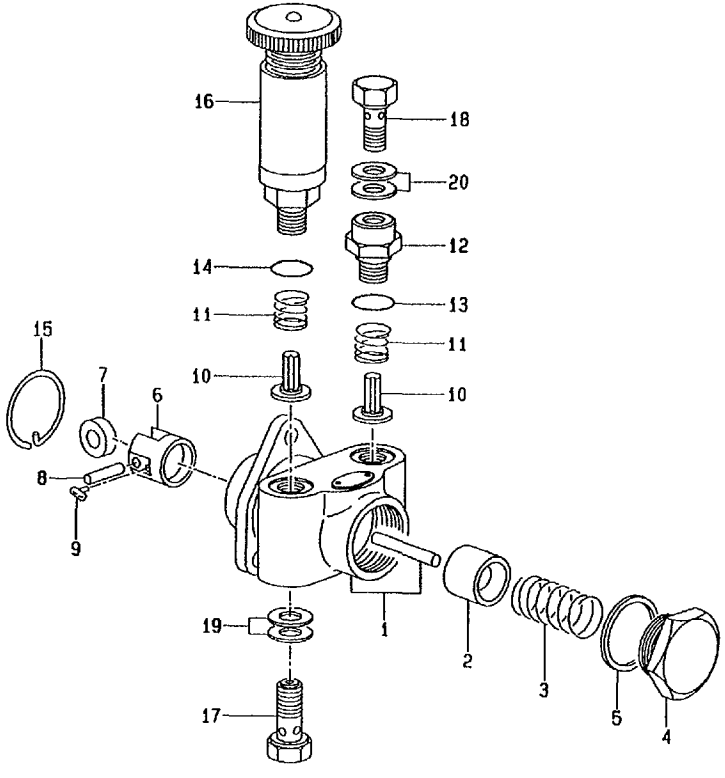

A: A-6BG1QC
B: A-6BG1TQC
C: A-6BG1QC02
D: A-6BG1QC03
E: A-6BG1QC05
F: A-6BG1QC06
G: A-6BG1QC07
H: A-6BG1QC08
J: A-6BG1QC09
K: A-6BG1QC05S

No.	Part No.	Description	Req'd	Remarks · Serial No.
A1	Z-1-15750-162-0	PUMP-ASSY	1	A,C,D,E,F,G,H,J,K
				INC.1-20
A2	Z-1-15750-154-0	PUMP-ASSY	1	B
				INC.1-20
1	Z-5-15751-012-0	HOUSING	1	A,C,D,E,F,G,H,J,K
-	Z-1-15751-012-0	HOUSING	1	B
2	Z-9-8135-1205-0	PISTON	1	
3	Z-9-8135-1302-0	SPRING	1	PISTON
4	Z-8-94171-185-0	PLUG	1	
5	Z-9-8135-5035-0	GASKET	1	A,C,D,E,F,G,H,J,K
-	Z-1-15759-042-0	GASKET	1	B
6	Z-5-15754-001-0	TAPEET	1	A,C,D,E,F,G,H,J,K
				INC.7-9
-	Z-1-15754-002-0	TAPEET	1	B
				INC.7-9
7	Z-9-8135-1403-0	ROLLER	1	A,C,D,E,F,G,H,J,K
-	Z-1-15759-043-0	ROLLER	1	B
8	Z-9-8135-1410-0	PIN	1	A,C,D,E,F,G,H,J,K
-	Z-9-8135-1406-0	PIN	1	B
9	Z-1-15759-002-0	GUIDE	2	A,C,D,E,F,G,H,J,K
-	Z-9-8135-1416-0	GUIDE	2	B
10	Z-1-15755-002-0	VALVE	2	
11	Z-9-8135-1702-0	SPRING	2	
12	Z-1-15759-003-0	ADAPTER	1	
13	Z-1-19623-016-0	O-RING	1	
14	Z-1-19623-016-0	O-RING	1	
15	Z-9-8135-5025-0	RING,SNAP	1	
16	Z-1-15761-006-0	PUMP	1	PRIMING
17	Z-1-09675-063-0	BOLT,EYE	1	A,C,D,E,F,G,H,J,K
-	Z-1-15759-029-0	BOLT	1	B
				EYE
18	Z-1-15759-011-0	BOLT,EYE	1	
19	Z-1-09630-085-0	PACKING	2	
20	Z-1-09630-085-0	PACKING	2	

J-15 COUPLING
(EZA61790)

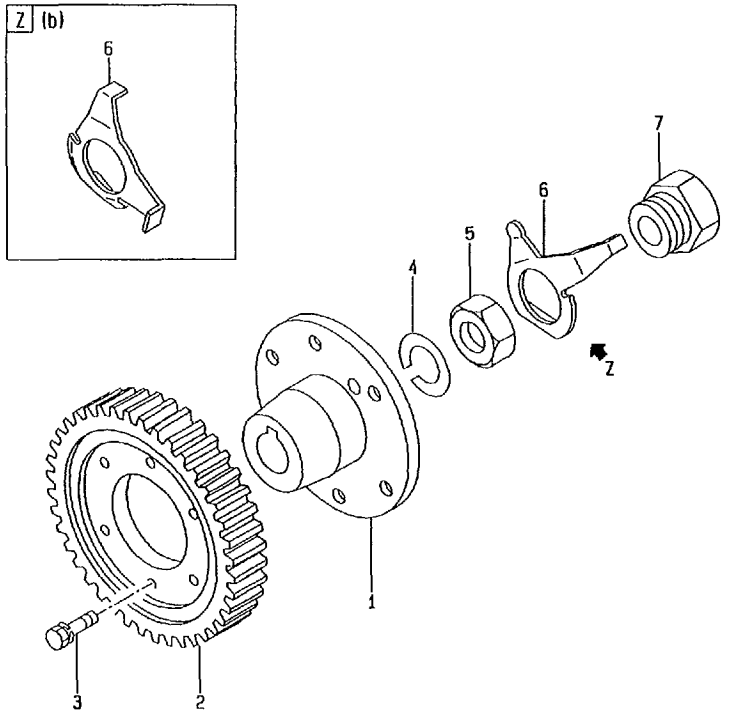

A: A-6BG1QC
B: A-6BG1TQC
C: A-6BG1QC02
D: A-6BG1QC03
E: A-6BG1QC05
F: A-6BG1QC06
G: A-6BG1QC07
H: A-6BG1QC08
J: A-6BG1QC09
K: A-6BG1QC05S

No.	Part No.	Description	Req'd	Remarks • Serial No.
A1	Z-1-15780-172-0	COUPLING	1	A,C,D,E,F,G,H,J,K INC.1-7
A2	Z-1-15780-168-0	COUPLING	1	B INC.1-7
1	Z-5-15781-003-0	COUPLING	1	A,C,D,E,F,G,H,J,K
-	Z-1-15781-016-0	COUPLING	1	B
2	Z-1-12524-015-0	GEAR	1	A,C,D,E,F,G,H,J,K
-	Z-5-12524-077-0	GEAR	1	B
3	Z-8-94457-517-0	BOLT	6	
4	Z-5-15619-048-0	WASHER	1	A,C,D,E,F,G,H,J,K
-	Z-9-8841-0264-0	WASHER	1	B
5	Z-9-8841-0502-0	NUT	1	A,C,D,E,F,G,H,J,K
-	Z-1-15789-094-0	NUT	1	B
6	Z-1-15619-247-0	PLATE	1	A,C,D,E,F,G,H,J,K LOCK
-	Z-1-15619-246-0	PLATE	1	B LOCK
7	Z-9-09662-007-0	BOLT	1	

K-2 STARTER & GENERATOR MOUNT
(EZA61810)

A: A-6BG1QC
B: A-6BG1TQC
C: A-6BG1QC02
D: A-6BG1QC03
E: A-6BG1QC05
F: A-6BG1QC06
G: A-6BG1QC07
H: A-6BG1QC08
J: A-6BG1QC09
K: A-6BG1QC05S

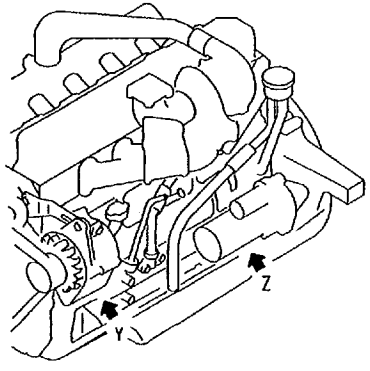

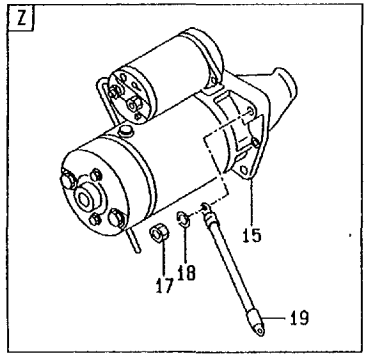

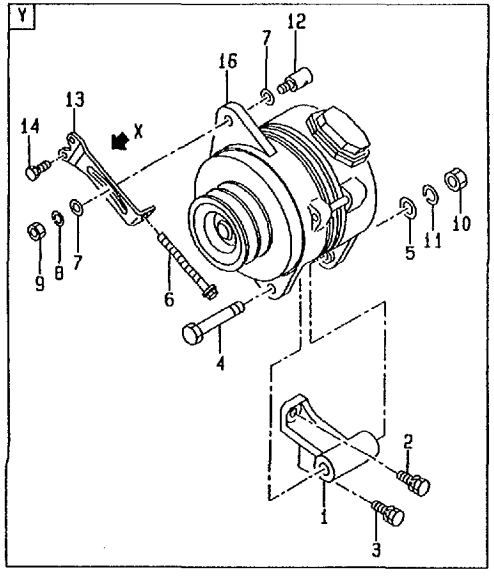

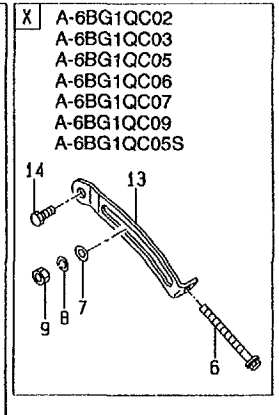

No.	Part No.	Description	Req'd	Remarks • Serial No.
1	Z-5-19711-031-2	BRACKET	1	
2	Z-0-5004-1025-0	BOLT	1	A,B -1997.7
-	Z-0-2808-1025-0	BOLT	1	A,B 1997.8-
-	Z-0-2808-1025-0	BOLT	1	C,D,E,F,G,H,J,K
3	Z-0-5004-1035-0	BOLT	2	A,B -1997.7
-	Z-0-2868-1035-0	BOLT	2	A,B 1997.8-
-	Z-0-2868-1035-0	BOLT	2	C,D,E,F,G,H,J,K
4	Z-1-09000-133-1	BOLT	1	
5	Z-9-0916-0514-0	WASHER	1	
6	530C2-72131	BOLT	1	
7	Z-9-0916-0712-0	WASHER	2	
8	Z-9-0915-0512-0	WASHER	1	
9	Z-9-9911-0412-0	NUT	1	
10	Z-9-9911-0414-0	NUT	1	
11	Z-9-0915-0514-0	WASHER	1	
12	530C2-72121	PIECE	1	SLIDING
13	530C2-72111	PLATE	1	A,B,H ADJUSTER
-	Z-1-13674-118-1	PLATE	1	C,D,E,F,G,J,K ADJUSTER
14	Z-0-5004-1040-0	BOLT	2	A,B -1997.7
-	Z-0-2868-1040-0	BOLT	2	A,B 1997.8-
-	Z-0-2868-1040-0	BOLT	2	H
-	Z-0-2868-1025-0	BOLT	1	C,D,E,F,G,J,K
15	Z-1-81100-191-1	STARTER-ASSY	1	A,B SEE LOC. K-5
-	Z-1-81100-141-1	STARTER-ASSY	1	C,D,E,F,H,J,K SEE LOC. K-9
-	Z-1-81100-206-1	STARTER-ASSY	1	G SEE LOC. K-11
16	Z-1-81200-249-3	GENERATOR	1	A,B,H 24V-40A(GE) SEE LOC. K-14

K-3 STARTER & GENERATOR MOUNT
(EZA61810)

A: A-6BG1QC
B: A-6BG1TQC
C: A-6BG1QC02
D: A-6BG1QC03
E: A-6BG1QC05
F: A-6BG1QC06
G: A-6BG1QC07
H: A-6BG1QC08
J: A-6BG1QC09
K: A-6BG1QC05S

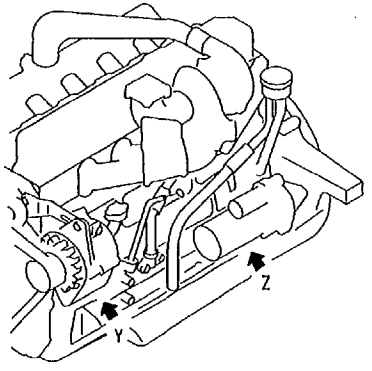

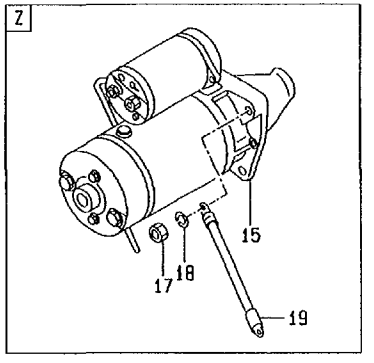

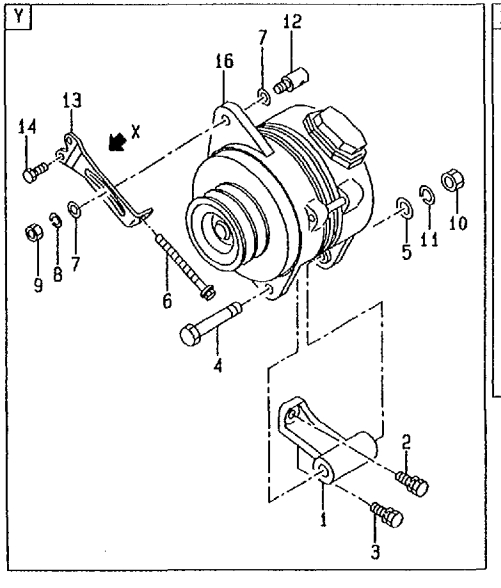

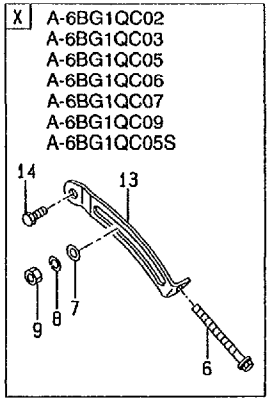

No.	Part No.	Description	Req'd	Remarks • Serial No.
16	Z-1-81200-365-0	GENERATOR	1	C,D,E,F,G,J,K 24V-25A SEE LOC. L-1
17	Z-9-9911-0412-0	NUT	3	
18	Z-9-0915-0512-0	WASHER	3	
19	Z-9-8293-2211-0	CABLE	1	EARTH

K-5 STARTER(INNER PARTS) (FOR A, B)

(EZA61820)

A: A-6BG1QC
B: A-6BG1TQC
C: A-6BG1QC02
D: A-6BG1QC03
E: A-6BG1QC05
F: A-6BG1QC06
G: A-6BG1QC07
H: A-6BG1QC08
J: A-6BG1QC09
K: A-6BG1QC05S

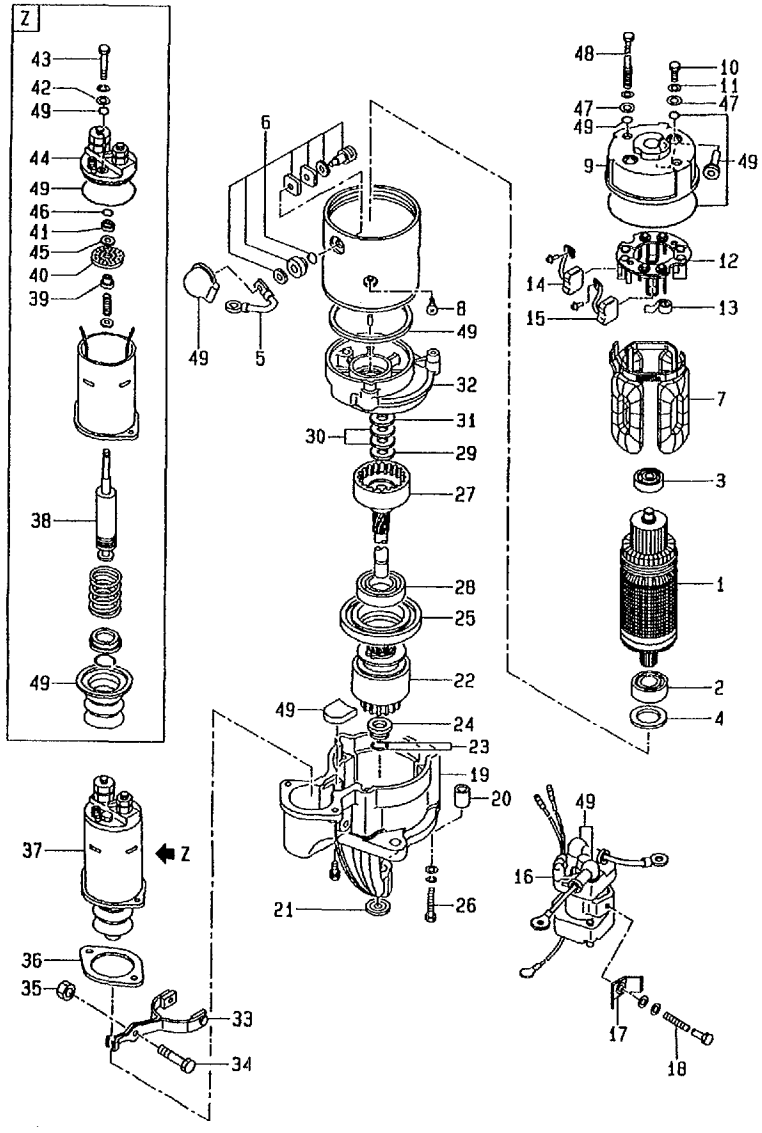

No.	Part No.	Description	Req'd	Remarks・Serial No.
A2	Z-1-81100-191-1	STARTER-ASSY	1	A,B INC.1-49
1	Z-1-81121-037-0	ARMATURE	1	A,B INC.2,3
2	Z-1-81129-395-0	BRG,BALL	1	A,B -1995.3
-	Z-5-81129-155-0	BRG,BALL	1	A,B 1995.4-
3	Z-1-81129-385-0	BRG,BALL	1	A,B -1995.3
-	Z-1-81129-196-0	BRG,BALL	1	A,B 1995.4-
4	Z-5-81129-156-0	WASHER	2	A,B ADJUST
5	Z-1-81116-044-0	WIRE	1	A,B LEAD
6	Z-1-81129-384-0	TERMINAL	1	A,B
7	Z-1-81129-396-0	COIL	1	A,B FIELD
8	NO PART NO.	SCREW	4	A,B DISH
A3	Z-1-81115-061-0	COVER	1	A,B INC.9-15
9	Z-1-81115-062-0	COVER	1	A,B REAR
10	NO PART NO.	BOLT	3	A,B
11	NO PART NO.	WASHER	2	A,B
12	Z-1-81118-036-0	HOLDER,BRUSH	1	A,B
13	Z-1-81117-014-0	SPRING	4	A,B BRUSH
14	Z-1-81116-043-0	BRUSH-ASSY	2	A,B (-)
15	Z-1-81116-042-0	BRUSH	2	A,B (+)
16	Z-1-82553-023-0	SWITCH,SAFETY	1	A,B INC.17,18 -1995.3

K-6 STARTER(INNER PARTS) (FOR A, B)

(EZA61820)

A: A-6BG1QC
B: A-6BG1TQC
C: A-6BG1QC02
D: A-6BG1QC03
E: A-6BG1QC05
F: A-6BG1QC06
G: A-6BG1QC07
H: A-6BG1QC08
J: A-6BG1QC09
K: A-6BG1QC05S

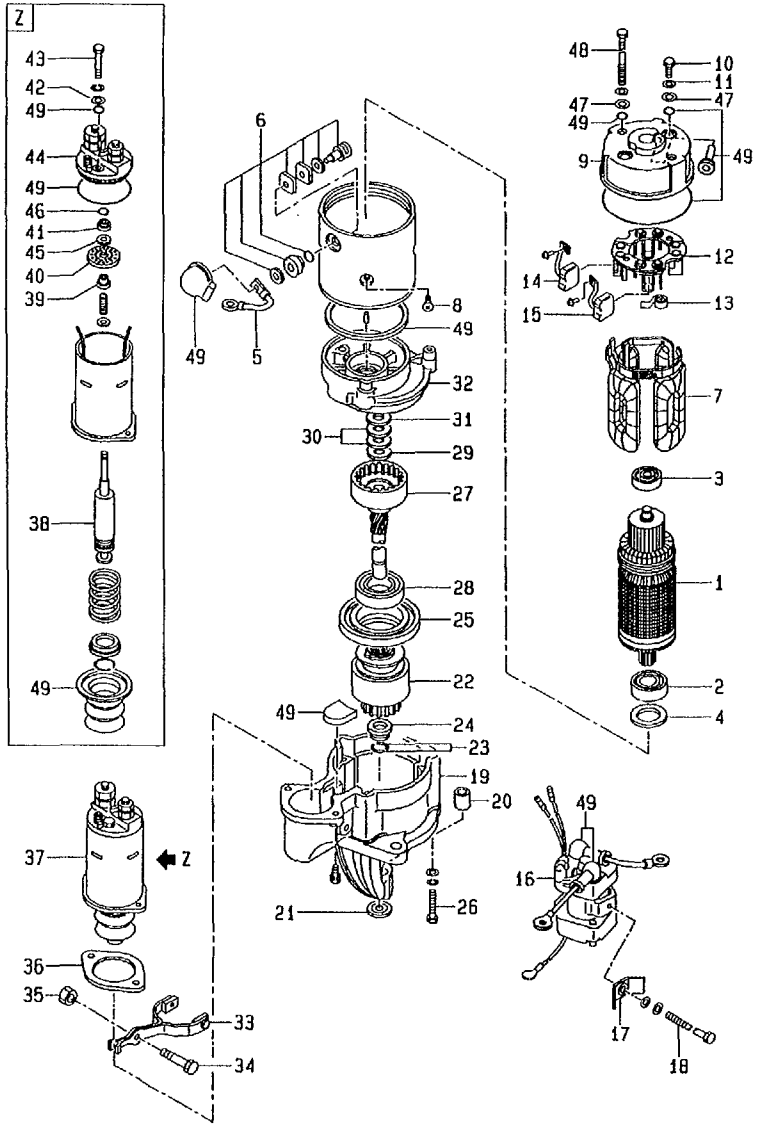

No.	Part No.	Description	Req'd	Remarks • Serial No.
16	Z-1-82553-037-0	RELAY	1	A,B SWITCH,SAFETY INC.17,18 1995.4-
17	NO PART NO.	HOLDER	1	A,B
18	NO PART NO.	BOLT	1	A,B
19	Z-1-81123-025-0	COVER	1	A,B FRONT INC.20
20	Z-1-81129-397-0	BUSHING	1	A,B
21	Z-5-81129-142-0	PLUG	1	A,B DISH
22	Z-5-81122-016-0	PINION	1	A,B CLUTCH
23	Z-5-81129-144-0	RING	2	A,B CLIP
24	Z-5-81129-145-0	STOPPER	1	A,B PINION
25	Z-1-81113-026-0	BRACKET	1	A,B CENTER
26	Z-1-81129-387-0	BOLT	3	A,B
27	Z-1-81123-024-0	SHAFT	1	A,B INC.28
28	Z-1-81129-386-0	BRG,BALL	1	A,B
29	Z-5-81129-160-0	WASHER	1	A,B
30	Z-5-81129-159-0	WASHER	2	A,B
31	Z-5-81129-158-0	WASHER	1	A,B
32	Z-1-81113-073-0	COVER	1	A,B CENTER
33	Z-1-81127-031-0	LEVER	1	A,B SHIFT
34	Z-1-81129-185-0	PIN	1	A,B
35	Z-1-81129-184-0	NUT	1	A,B
36	Z-5-81129-147-0	PLATE	1	A,B
37	Z-5-81151-036-0	SWITCH	1	A,B INC.38-46
38	Z-5-81129-146-0	PLUNGER	1	A,B
39	Z-9-8211-6140-0	BUSHING	1	A,B
40	Z-5-81129-148-0	CONTACTOR	1	A,B
41	Z-5-81118-019-0	HOLDER	1	A,B
42	Z-5-81129-151-0	WASHER	2	A,B

K-7 STARTER(INNER PARTS) (FOR A, B)
(EZA61820)

A: A-6BG1QC
B: A-6BG1TQC
C: A-6BG1QC02
D: A-6BG1QC03
E: A-6BG1QC05
F: A-6BG1QC06
G: A-6BG1QC07
H: A-6BG1QC08
J: A-6BG1QC09
K: A-6BG1QC05S

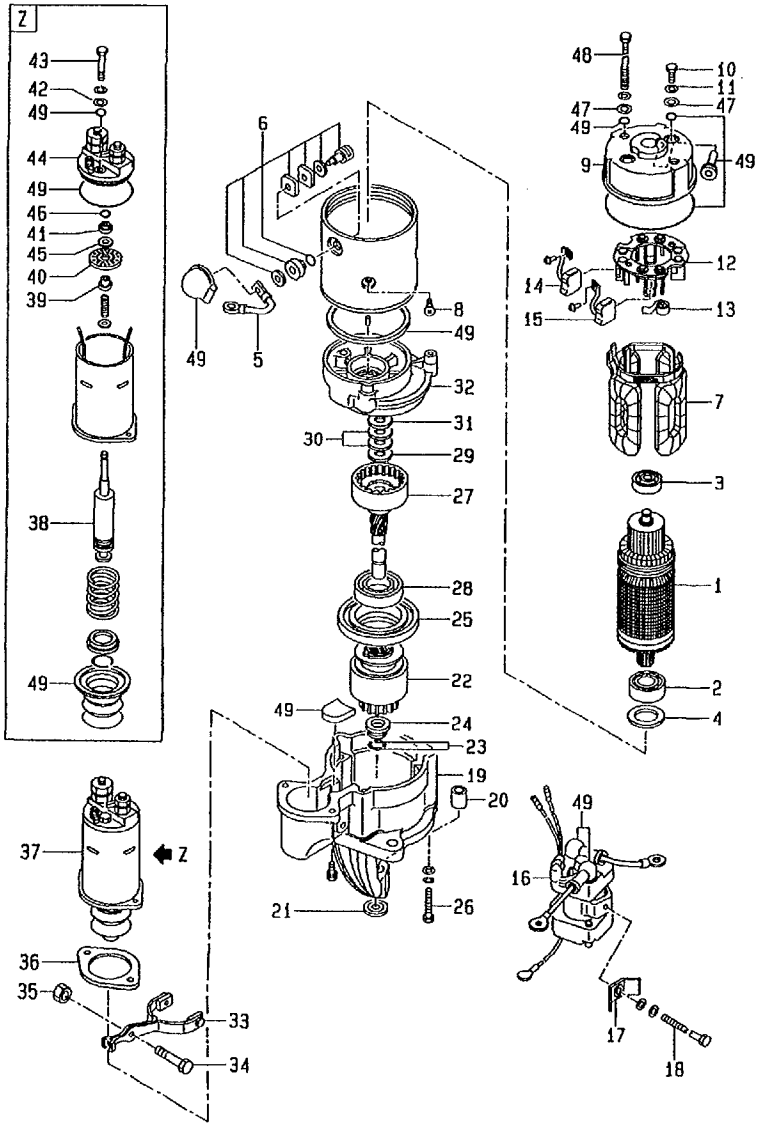

No.	Part No.	Description	Req'd	Remarks • Serial No.
43	NO PART NO.	BOLT	2	A,B
44	Z-5-81129-150-0	TERMINAL	1	A,B
45	Z-9-8211-6142-0	WASHER	1	A,B
46	Z-5-81129-149-0	RING	2	A,B
				CLIP
47	Z-1-81229-114-0	WASHER	2	A,B
48	Z-5-81129-214-0	BOLT	2	A,B
				THROUGH
49	Z-1-81129-394-0	KIT,SEAL	1	A,B

K-9 STARTER(INNER PARTS) (FOR C, D, E, F, H, J, K)
(EZA61860)

A: A-6BG1QC
B: A-6BG1TQC
C: A-6BG1QC02
D: A-6BG1QC03
E: A-6BG1QC05
F: A-6BG1QC06
G: A-6BG1QC07
H: A-6BG1QC08
J: A-6BG1QC09
K: A-6BG1QC05S

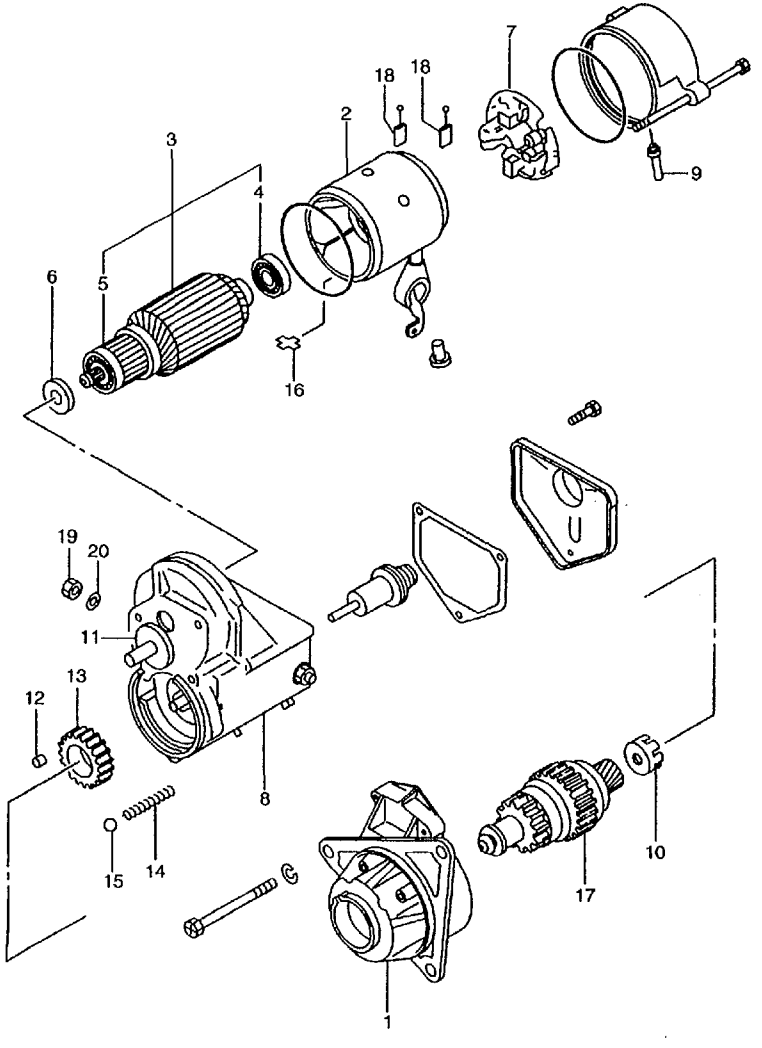

No.	Part No.	Description	Req'd	Remarks · Serial No.
A	Z-1-81100-141-1	STARTER-ASSY	1	C,D,E,F,H,J,K INC.1-20
1	Z-1-81114-018-0	CASE	1	C,D,E,F,H,J,K PINION
2	Z-1-81129-696-0	YOKE	1	C,D,E,F,H,J,K
3	Z-1-81121-052-1	ARMATURE	1	C,D,E,F,H,J,K INC.4,5
4	Z-5-09800-064-0	BRG,BALL	1	C,D,E,F,H,J,K
5	Z-5-09800-041-0	BRG,BALL	1	C,D,E,F,H,J,K
6	Z-5-81129-128-0	WASHER	1	C,D,E,F,H,J,K
7	Z-5-81118-013-0	HOLDER,BRUSH	1	C,D,E,F,H,J,K
8	Z-1-81151-034-0	SWITCH	1	C,D,E,F,H,J,K MAGNETIC
9	Z-1-81129-677-0	COVER	1	C,D,E,F,H,J,K DUST
10	Z-5-81129-121-0	RETAINER	1	C,D,E,F,H,J,K
11	Z-5-81129-127-0	RETAINER	1	C,D,E,F,H,J,K
12	Z-5-81129-120-0	ROLLER	5	C,D,E,F,H,J,K
13	Z-5-81123-018-0	GEAR	1	C,D,E,F,H,J,K
14	Z-5-81129-119-0	SPRING	1	C,D,E,F,H,J,K
15	Z-5-81129-092-0	BALL	1	C,D,E,F,H,J,K
16	Z-5-81129-136-0	PLATE	1	C,D,E,F,H,J,K LOCK
17	Z-5-81124-004-0	CLUTCH,PINION	1	C,D,E,F,H,J,K
18	Z-8-94171-853-0	BRUSH	2	C,D,E,F,H,J,K
19	Z-5-81129-126-0	NUT	2	C,D,E,F,H,J,K
20	Z-5-81129-134-0	WASHER	1	C,D,E,F,H,J,K

K-11 STARTER(INNER PARTS) (FOR G)

(EZA61870)

A: A-6BG1QC
B: A-6BG1TQC
C: A-6BG1QC02
D: A-6BG1QC03
E: A-6BG1QC05
F: A-6BG1QC06
G: A-6BG1QC07
H: A-6BG1QC08
J: A-6BG1QC09
K: A-6BG1QC05S

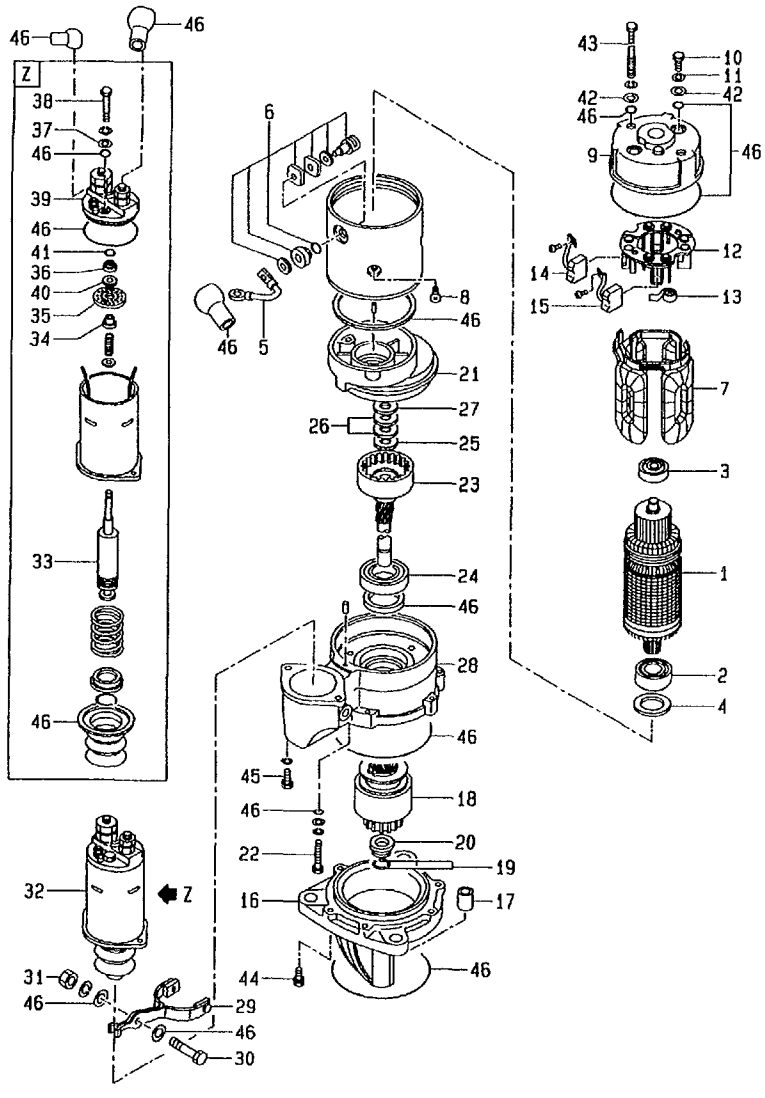

No.	Part No.	Description	Req'd	Remarks • Serial No.
A1	Z-1-81100-206-1	STARTER-ASSY	1	G
				INC.1-46
1	Z-1-81121-037-0	ARMATURE	1	G
				INC.2-4
2	Z-5-81129-155-0	BRG,BALL	1	G
3	Z-1-81129-196-0	BRG,BALL	1	G
4	Z-5-81129-156-0	WASHER	2	G
				ADJUST
5	Z-1-81116-044-0	WIRE	1	G
				LEAD
6	Z-1-81129-384-0	TERMINAL	1	G
7	Z-1-81129-396-0	COIL	1	G
				FIELD
8	NO PART NO.	SCREW	4	G
				DISH
A2	Z-1-81115-065-0	COVER	1	G
				INC.9-15
9	Z-1-81115-066-0	COVER	1	G
				REAR
10	NO PART NO.	BOLT	3	G
11	NO PART NO.	WASHER	2	G
12	Z-1-81118-036-0	HOLDER,BRUSH	1	G
13	Z-1-81117-014-0	SPRING	4	G
				BRUSH
14	Z-1-81116-043-0	BRUSH-ASSY	2	G
				(-)
15	Z-1-81116-042-0	BRUSH	2	G
				(+)
16	Z-1-81113-075-0	COVER	1	G
				INC.17
17	Z-1-81129-397-0	BUSHING	1	G
18	Z-5-81122-016-0	PINION	1	G
				CLUTCH
19	Z-5-81129-144-0	RING	1	G
				CLIP
20	Z-5-81129-145-0	STOPPER	1	G
				PINION
21	Z-1-81113-077-0	BRACKET	1	G
				CENTER
22	NO PART NO.	BOLT	3	G

K-12 STARTER(INNER PARTS) (FOR G)
(EZA61870)

A: A-6BG1QC
B: A-6BG1TQC
C: A-6BG1QC02
D: A-6BG1QC03
E: A-6BG1QC05
F: A-6BG1QC06
G: A-6BG1QC07
H: A-6BG1QC08
J: A-6BG1QC09
K: A-6BG1QC05S

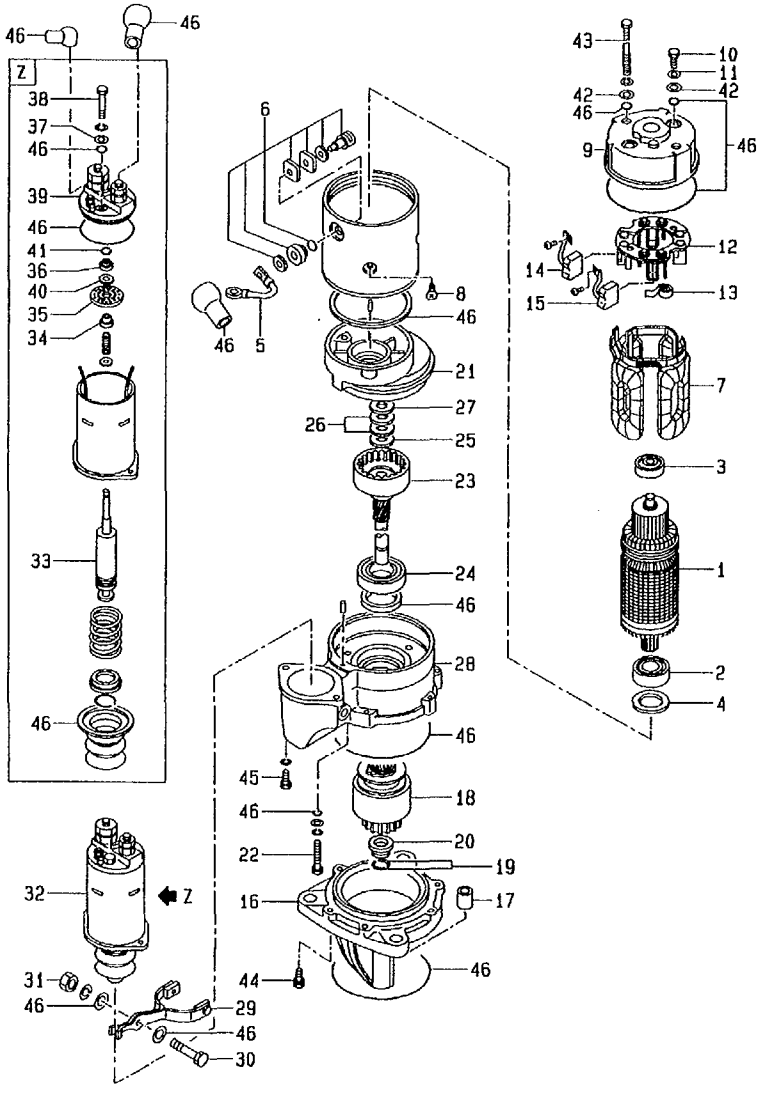

No.	Part No.	Description	Req'd	Remarks・Serial No.
23	Z-1-81129-402-0	SHAFT	1	G
				INC.24
24	Z-1-81129-386-0	BRG,BALL	1	G
25	Z-5-81129-160-0	WASHER	1	G
26	Z-5-81129-159-0	WASHER	2	G
27	Z-5-81129-158-0	WASHER	1	G
28	Z-1-81113-076-0	COVER	1	G
				CENTER
29	Z-1-81127-032-0	LEVER	1	G
				SHIFT
30	Z-1-81129-234-0	PIN	1	G
31	Z-1-81129-184-0	NUT	1	G
32	Z-5-81151-036-0	SWITCH	1	G
				INC.33-41
33	Z-5-81129-146-0	PLUNGER	1	G
34	Z-9-8211-6140-0	BUSHING	1	G
35	Z-5-81129-148-0	CONTACTOR	1	G
36	Z-5-81118-019-0	HOLDER	1	G
37	Z-5-81129-151-0	WASHER	2	G
38	NO PART NO.	BOLT	2	G
39	Z-5-81129-150-0	TERMINAL	1	G
40	Z-9-8211-6142-0	WASHER	1	G
41	Z-5-81129-149-0	RING	2	G
				CLIP
42	NO PART NO.	WASHER	5	G
43	Z-5-81129-214-0	BOLT	2	G
				THROUGH
44	Z-1-81129-403-0	BOLT	6	G
45	NO PART NO.	BOLT	2	G
46	Z-1-81129-418-0	KIT,SEAL	1	G

K-14 GENERATOR(INNER PARTS) (FOR A, B, H)

(EZA61830)

A: A-6BG1QC
B: A-6BG1TQC
C: A-6BG1QC02
D: A-6BG1QC03
E: A-6BG1QC05
F: A-6BG1QC06
G: A-6BG1QC07
H: A-6BG1QC08
J: A-6BG1QC09
K: A-6BG1QC05S

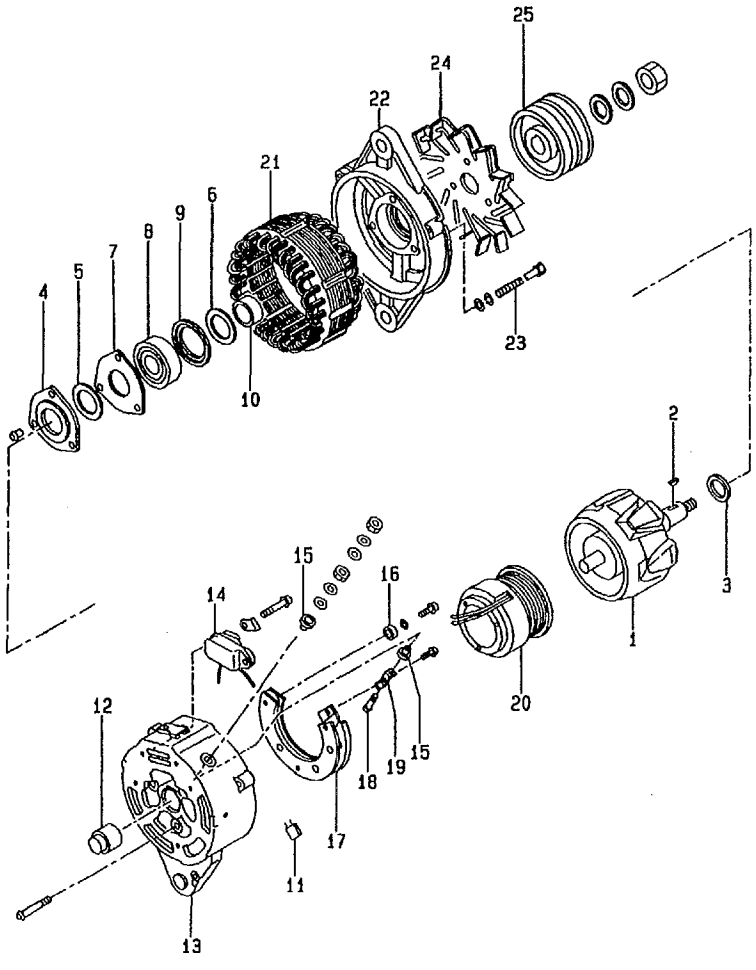

No.	Part No.	Description	Req'd	Remarks • Serial No.
A1	Z-1-81200-249-3	GENERATOR	1	A,B,H
				INC.1-25 24V-40A(GE)
1	Z-1-81221-056-0	ROTOR	1	A,B,H
2	Z-9-8221-5867-0	KEY	1	A,B,H
3	Z-1-81229-373-0	COLLAR	1	A,B,H
4	Z-1-81229-375-0	RETAINER	1	A,B,H
5	Z-1-81229-383-0	PACKING	1	A,B,H
6	Z-1-81229-384-0	PACKING	1	A,B,H
7	Z-1-81229-376-0	RETAINER	1	A,B,H
8	Z-1-81229-380-0	BRG	1	A,B,H
				BALL
9	Z-1-81229-377-0	RETAINER	1	A,B,H
10	Z-1-81229-374-0	COLLAR	1	A,B,H
A2	Z-1-81214-175-0	BRACKET	1	A,B,H
				INC.11-19
11	Z-1-81229-539-0	CONDENSER	1	A,B,H
12	Z-1-81229-381-0	REGULATOR	1	A,B,H
13	Z-1-81214-176-0	BRACKET	1	A,B,H
14	Z-1-81270-001-0	REGULATOR	1	A,B,H
15	Z-1-81229-042-0	BUSHING	2	A,B,H
16	NO PART NO.	PLATE	2	A,B,H
				INSULATE
17	Z-1-81219-056-0	RECTIFIER	1	A,B,H
18	Z-5-81229-192-0	BOLT	1	A,B,H
19	NO PART NO.	BAR	1	A,B,H
				CONNECTOR
20	Z-1-81212-003-0	COIL	1	A,B,H
				FIELD
21	Z-1-81211-062-0	STATOR	1	A,B,H
22	Z-1-81213-052-0	BRACKET	1	A,B,H
				FRONT
23	Z-1-81229-382-0	BOLT	3	A,B,H
24	Z-1-81223-005-0	FAN	1	A,B,H
25	Z-1-81222-055-0	PULLEY	1	A,B,H

L-1 GENERATOR(INNER PARTS) (FOR C, D, E, F, G, J, K)

(EZA61840)

A: A-6BG1QC
B: A-6BG1TQC
C: A-6BG1QC02
D: A-6BG1QC03
E: A-6BG1QC05
F: A-6BG1QC06
G: A-6BG1QC07
H: A-6BG1QC08
J: A-6BG1QC09
K: A-6BG1QC05S

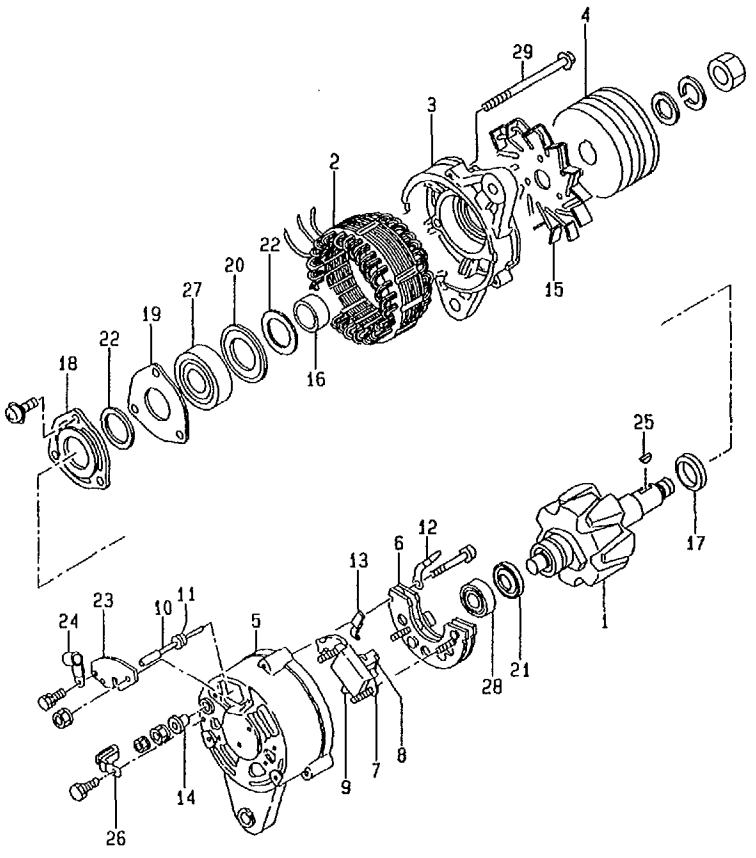

No.	Part No.	Description	Req'd	Remarks・Serial No.
A1	Z-1-81200-365-0	GENERATOR	1	C,D,E,F,G,J,K INC.1-29 24V-25A
1	Z-1-81221-072-0	ROTOR	1	C,D,E,F,G,J,K
2	Z-1-81211-090-0	STATOR	1	C,D,E,F,G,J,K
3	Z-1-81213-067-0	BRACKET	1	C,D,E,F,G,J,K FRONT
4	Z-1-81222-055-0	PULLEY	1	C,D,E,F,G,J,K
A2	Z-1-81214-229-0	BRACKET-ASSY	1	C,D,E,F,G,J,K INC.5-14
5	Z-1-81214-224-0	BRACKET	1	C,D,E,F,G,J,K REAR
6	Z-1-81217-069-0	RECTIFIER	1	C,D,E,F,G,J,K
7	Z-1-81270-007-0	REGULATOR	1	C,D,E,F,G,J,K INC.8,9
8	Z-1-81217-062-0	HOLDER,BRUSH	1	C,D,E,F,G,J,K
9	NO PART NO.	BRUSH	2	C,D,E,F,G,J,K
10	Z-1-81229-556-0	WIRE,LEAD	1	C,D,E,F,G,J,K
11	NO PART NO.	BUSHING	1	C,D,E,F,G,J,K
12	NO PART NO.	BAR	1	C,D,E,F,G,J,K CONNECTOR
13	NO PART NO.	BAR	1	C,D,E,F,G,J,K CONNECTOR
14	Z-8-94173-061-0	BUSHING	1	C,D,E,F,G,J,K
15	Z-1-81223-009-0	FAN	1	C,D,E,F,G,J,K
16	Z-1-81229-527-0	COLLAR	1	C,D,E,F,G,J,K
17	Z-1-81229-543-0	COLLAR	1	C,D,E,F,G,J,K
18	Z-1-81229-513-0	RETAINER	1	C,D,E,F,G,J,K
19	Z-1-81229-376-0	RETAINER	1	C,D,E,F,G,J,K
20	Z-1-81229-526-0	RETAINER	1	C,D,E,F,G,J,K
21	Z-8-94173-060-0	RETAINER	1	C,D,E,F,G,J,K
22	Z-1-81229-383-0	PACKING	2	C,D,E,F,G,J,K
23	Z-1-81229-544-0	COVER	1	C,D,E,F,G,J,K
24	Z-1-81229-122-0	CLIP	1	C,D,E,F,G,J,K
25	Z-9-8221-5867-0	KEY	1	C,D,E,F,G,J,K
26	Z-1-81229-516-0	CLIP	1	C,D,E,F,G,J,K
27	Z-1-81229-225-0	BRG,BALL	1	C,D,E,F,G,J,K
28	Z-8-94173-054-0	BRG,BALL	1	C,D,E,F,G,J,K
29	NO PART NO.	BOLT	3	C,D,E,F,G,J,K THROUGH

L-3 ELECTRICAL PARTS,FOOT & HANGER
(EZA61850)

A: A-6BG1QC
B: A-6BG1TQC
C: A-6BG1QC02
D: A-6BG1QC03
E: A-6BG1QC05
F: A-6BG1QC06
G: A-6BG1QC07
H: A-6BG1QC08
J: A-6BG1QC09
K: A-6BG1QC05S

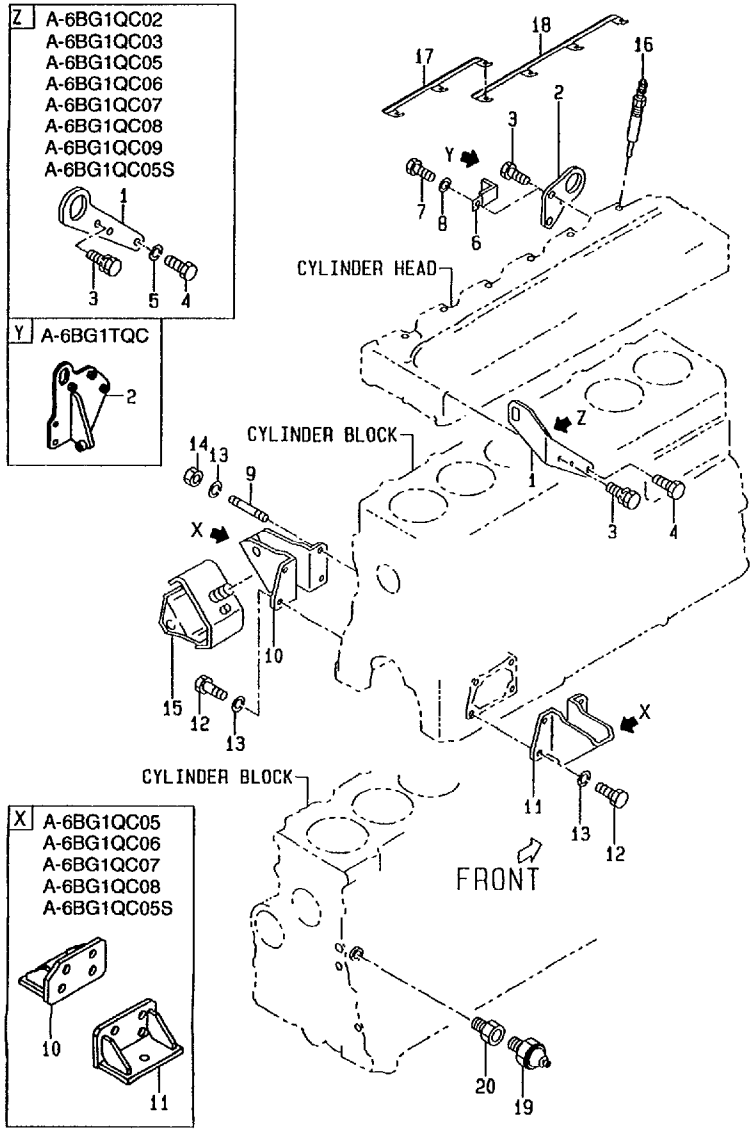

No.	Part No.	Description	Req'd	Remarks・Serial No.
1	Z-1-11777-106-0	HANGER	1	A,B
-	Z-5-11777-055-1	HANGER	1	C,D,E,F,G,H,J,K
2	Z-9-11777-622-1	HANGER	1	A,C,D,J
-	Z-1-11777-110-1	HANGER	1	B
-	Z-1-11777-171-1	HANGER	1	E,F,G,H,K
3	Z-0-5014-0825-0	BOLT	1	A,B -1997.1
-	Z-0-2868-0825-0	BOLT	1	A,B 1997.2-
-	Z-0-5004-1025-0	BOLT	2	A,B -1997.1
-	Z-0-2868-1025-0	BOLT	2	A,B 1997.2-
-	Z-0-5004-1040-0	BOLT	1	A,B -1997.1
-	Z-0-2868-1040-0	BOLT	1	A,B 1997.2-
-	Z-0-2868-1020-0	BOLT	3	C,D,E,F,G,H,J,K
-	Z-0-5004-1035-0	BOLT	2	E,F,G,H,K
4	Z-0-2080-1430-0	BOLT	1	A,B
-	Z-0-2080-1425-0	BOLT	1	C,D,E,F,G,H,J,K
5	Z-9-0915-0514-0	WASHER	1	C,D,E,F,G,H,J,K
6	Z-9-09916-755-0	CLIP	1	A
7	Z-0-2080-0610-0	BOLT	1	A -1997.1
-	Z-0-2808-0610-0	BOLT	1	A 1997.2-
8	Z-9-0915-0506-0	WASHER	1	A -1997.1
9	Z-1-09300-053-0	STUD	1	A,B,C,D,J
-	Z-1-09300-055-0	STUD	1	E,F,G,H,K
10	Z-1-11771-156-1	FOOT	1	A,B,C,D,J
-	Z-1-11771-181-0	BRACKET,LH	1	E,F,G,H,K
11	Z-1-11771-157-1	FOOT	1	A,B,C,D,J
-	Z-1-11771-113-1	BRACKET,RH	1	E,F,G,H,K
12	Z-9-0206-1022-0	BOLT	7	A,B -1997.7
-	Z-0-2869-1025-0	BOLT	7	A,B 1997.8-
-	Z-0-2869-1025-0	BOLT	7	C,D,J

L-4 ELECTRICAL PARTS,FOOT & HANGER

(EZA61850)

A: A-6BG1QC
B: A-6BG1TQC
C: A-6BG1QC02
D: A-6BG1QC03
E: A-6BG1QC05
F: A-6BG1QC06
G: A-6BG1QC07
H: A-6BG1QC08
J: A-6BG1QC09
K: A-6BG1QC05S

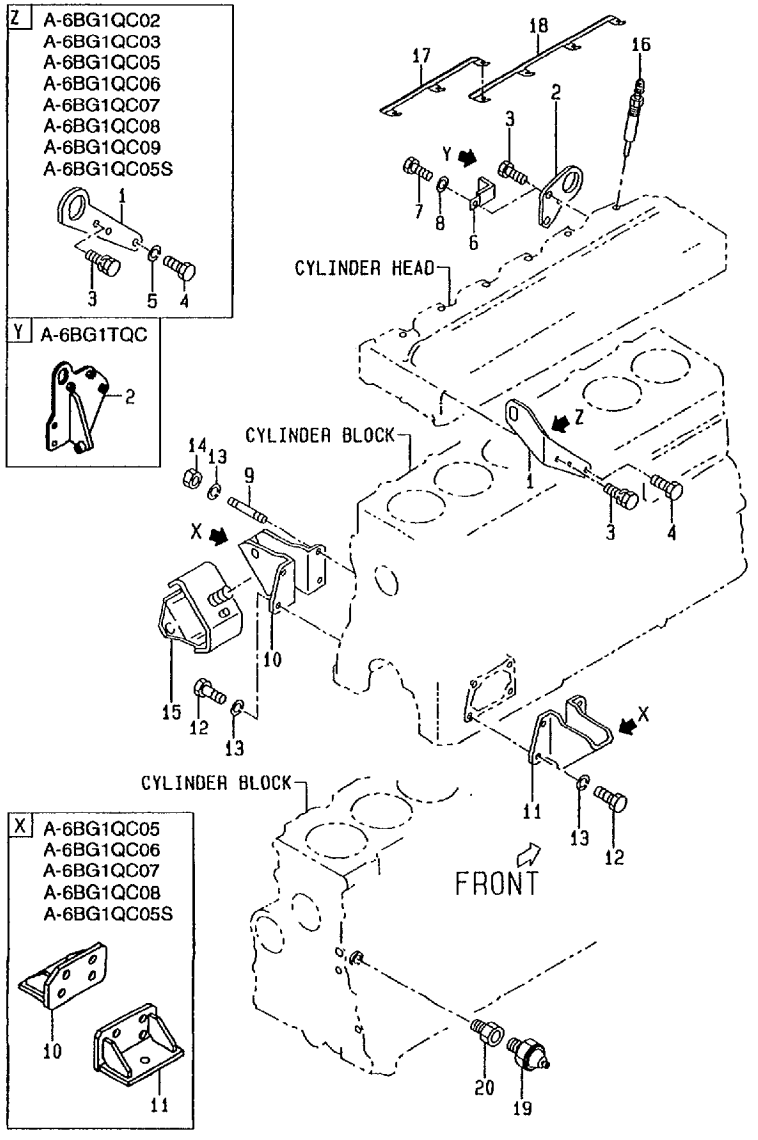

No.	Part No.	Description	Req'd	Remarks・Serial No.
12	Z-9-0206-1028-0	BOLT	7	E,F,G,H,K
13	Z-9-0915-0510-0	WASHER	8	A,B -1997.7
-	Z-9-0915-0510-0	WASHER	1	A,B 1997.8-
-	Z-9-0915-0510-0	WASHER	1	C,D,E,F,G,H,J,K
14	Z-9-0911-0510-0	NUT	1	
15	Z-1-53215-126-0	RUBBER	2	A,B,C,D,J CUSHION
16	Z-8-97047-604-0	PLUG,GLOW	6	A,B
-	Z-9-8251-3928-9	PLUG,GLOW	6	C,D,E,F,G,H,J,K
17	Z-5-19732-001-1	CONNECTOR	1	
18	Z-5-19732-002-1	CONNECTOR	1	
A	Z-5-82410-012-2	SWITCH-ASSY	1	C,D,E,F,G,H,J,K INC.19,20
19	Z-1-82410-008-2	SWITCH	1	C,D,E,F,G,H,J,K OIL PRESSURE
20	Z-9-09902-238-0	ADAPTER	1	C,D,E,F,G,H,J,K

M-2 PARTS NUMBER INDEX 部品番号順索引表

部品番号 PART No.	ロケーション LOCATION	部品番号 PART No.	ロケーション LOCATION	部品番号 PART No.	ロケーション LOCATION	部品番号 PART No.	ロケーション LOCATION	部品番号 PART No.	ロケーション LOCATION	部品番号 PART No.	ロケーション LOCATION
Z-0-1080-5860-0	I-15	Z-0-2808-1050-0	H-6	Z-0-2878-1025-0	G-3	Z-0-5014-0825-0	C-15	Z-1-09300-053-0	L-3	Z-1-09625-438-0	C-15
Z-0-1080-6065-0	H-8	Z-0-2808-1070-0	H-6	Z-0-2888-1450-0	F-11	Z-0-5014-0825-0	H-10	Z-1-09300-055-0	L-3	Z-1-09625-439-1	D-2
Z-0-1080-6070-0	F-4	Z-0-2808-1070-0	H-6	Z-0-2889-1445-0	D-2	Z-0-5014-0825-0	I-8	Z-1-09330-077-1	C-12	Z-1-09625-469-0	D-2
Z-0-1080-6080-0	H-8	Z-0-2808-6013-0	F-11	Z-0-2889-1445-0	D-2	Z-0-5014-0825-0	L-3	Z-1-09337-027-0	E-3	Z-1-09630-082-0	I-3
Z-0-1080-6090-0	H-8	Z-0-2808-6015-0	G-12	Z-0-2889-1460-0	D-2	Z-0-5014-0828-0	F-2	Z-1-09360-439-0	C-7	Z-1-09630-082-0	I-10
Z-0-1080-6095-0	H-11	Z-0-2809-0800-0	H-2	Z-0-2889-1460-0	D-2	Z-0-5014-0828-0	F-4	Z-1-09360-752-0	E-3	Z-1-09630-083-0	G-2
Z-0-1080-6455-0	F-11	Z-0-2868-0820-0	C-4	Z-0-5004-0612-0	C-16	Z-0-5014-0828-0	F-7	Z-1-09360-782-0	F-5	Z-1-09630-085-0	C-5
Z-0-1081-0860-0	I-12	Z-0-2868-0820-0	C-4	Z-0-5004-0614-0	C-16	Z-0-5014-0828-0	H-14	Z-1-09400-027-0	F-11	Z-1-09630-085-0	D-5
Z-0-1081-0860-0	I-15	Z-0-2868-0820-0	C-15	Z-0-5004-0625-0	G-3	Z-0-5014-0828-0	H-14	Z-1-09400-027-0	F-11	Z-1-09630-085-0	G-2
Z-0-1081-0875-0	I-12	Z-0-2868-0820-0	C-15	Z-0-5004-0630-0	I-3	Z-0-5014-0828-0	H-14	Z-1-09400-041-0	F-9	Z-1-09630-085-0	I-3
Z-0-1081-0875-0	I-15	Z-0-2868-0825-0	C-16	Z-0-5004-0630-0	I-3	Z-0-5014-0830-0	F-4	Z-1-09400-116-0	E-5	Z-1-09630-085-0	I-3
Z-0-1081-1055-0	E-5	Z-0-2868-0825-0	C-16	Z-0-5004-0816-0	G-3	Z-0-5014-0835-0	H-14	Z-1-09420-005-0	F-5	Z-1-09630-085-0	I-3
Z-0-13311-119-0	G-2	Z-0-2868-0825-0	C-16	Z-0-5004-0818-0	D-4	Z-0-5014-0845-0	H-13	Z-1-09440-040-1	F-4	Z-1-09630-085-0	I-4
Z-0-2080-0610-0	L-3	Z-0-2868-0825-0	L-3	Z-0-5004-0820-0	C-15	Z-0-5014-0845-0	H-14	Z-1-09440-040-1	F-7	Z-1-09630-085-0	I-6
Z-0-2080-0625-0	C-8	Z-0-2868-0830-0	F-4	Z-0-5004-0825-0	D-2	Z-0-5014-0850-0	H-14	Z-1-09468-002-1	I-3	Z-1-09630-085-0	J-5
Z-0-2080-1016-0	C-8	Z-0-2868-1020-0	C-5	Z-0-5004-0825-0	E-5	Z-0-5014-1025-0	F-11	Z-1-09500-008-0	F-11	Z-1-09630-085-0	J-13
Z-0-2080-1020-0	I-3	Z-0-2868-1020-0	I-3	Z-0-5004-0835-0	G-2	Z-0-5014-1035-0	H-11	Z-1-09500-008-0	F-11	Z-1-09630-085-0	J-13
Z-0-2080-1022-0	F-4	Z-0-2868-1020-0	I-13	Z-0-5004-0840-0	G-2	Z-0-5014-1040-0	G-7	Z-1-09503-033-1	F-5	Z-1-09630-115-0	C-5
Z-0-2080-1425-0	L-3	Z-0-2868-1020-0	I-15	Z-0-5004-0845-0	C-15	Z-0-9115-0208-0	C-7	Z-1-09503-070-0	H-5	Z-1-09637-058-1	G-3
Z-0-2080-1430-0	L-3	Z-0-2868-1020-0	L-3	Z-0-5004-0850-0	G-3	Z-0-9116-0214-0	D-2	Z-1-09580-335-0	E-5	Z-1-09637-060-0	G-3
Z-0-2808-0610-0	L-3	Z-0-2868-1025-0	F-11	Z-0-5004-0870-0	H-13	Z-0-9116-0214-0	D-2	Z-1-09600-005-1	E-2	Z-1-09637-061-0	F-2
Z-0-2808-0612-0	C-16	Z-0-2868-1025-0	G-5	Z-0-5004-1020-0	C-5	Z-1-09000-133-1	K-2	Z-1-09600-012-1	C-2	Z-1-09637-061-0	F-7
Z-0-2808-0612-0	C-16	Z-0-2868-1025-0	G-5	Z-0-5004-1020-0	I-12	Z-1-09000-199-1	F-11	Z-1-09600-016-0	E-2	Z-1-09660-101-0	C-4
Z-0-2808-0812-0	G-3	Z-0-2868-1025-0	K-2	Z-0-5004-1020-0	I-13	Z-1-09000-282-1	G-12	Z-1-09600-016-0	E-2	Z-1-09660-119-2	H-5
Z-0-2808-0812-0	H-2	Z-0-2868-1025-0	L-3	Z-0-5004-1020-0	I-15	Z-1-09000-469-1	C-2	Z-1-09600-052-0	C-2	Z-1-09666-036-0	C-5
Z-0-2808-0816-0	I-8	Z-0-2868-1035-0	H-6	Z-0-5004-1025-0	G-5	Z-1-09000-567-0	E-5	Z-1-09604-022-0	D-4	Z-1-09675-037-1	I-3
Z-0-2808-0825-0	I-8	Z-0-2868-1035-0	H-6	Z-0-5004-1025-0	I-15	Z-1-09009-119-0	C-16	Z-1-09604-074-0	C-16	Z-1-09675-063-0	I-4
Z-0-2808-0840-0	G-2	Z-0-2868-1035-0	H-11	Z-0-5004-1025-0	I-13	Z-1-09030-091-0	H-14	Z-1-09604-094-0	G-8	Z-1-09675-063-0	J-13
Z-0-2808-0840-0	G-2	Z-0-2868-1035-0	H-11	Z-0-5004-1025-0	K-2	Z-1-09044-047-0	G-5	Z-1-09605-066-0	C-3	Z-1-09675-077-0	G-2
Z-0-2808-0845-0	C-15	Z-0-2868-1035-0	H-11	Z-0-5004-1025-0	L-3	Z-1-09044-071-1	H-2	Z-1-09605-068-1	C-3	Z-1-09675-081-0	G-2
Z-0-2808-0845-0	C-15	Z-0-2868-1035-0	K-2	Z-0-5004-1035-0	H-6	Z-1-09044-074-0	H-2	Z-1-09605-079-1	C-4	Z-1-09675-086-0	C-5
Z-0-2808-0850-0	C-16	Z-0-2868-1035-0	K-2	Z-0-5004-1035-0	K-2	Z-1-09044-075-1	H-2	Z-1-09623-013-0	J-1	Z-1-09675-086-0	G-2
Z-0-2808-0850-0	C-16	Z-0-2868-1040-0	F-11	Z-0-5004-1035-0	L-3	Z-1-09052-018-1	C-7	Z-1-09623-052-0	J-1	Z-1-09675-086-0	I-3
Z-0-2808-0850-0	G-3	Z-0-2868-1040-0	G-8	Z-0-5004-1040-0	K-2	Z-1-09052-022-1	C-7	Z-1-09623-057-0	D-4	Z-1-09675-086-0	I-4
Z-0-2808-1016-0	C-8	Z-0-2868-1040-0	G-10	Z-0-5004-1040-0	L-3	Z-1-09070-100-0	E-3	Z-1-09623-163-0	G-7	Z-1-09675-132-0	D-5
Z-0-2808-1020-0	F-4	Z-0-2868-1040-0	K-2	Z-0-5004-1050-0	H-6	Z-1-09070-101-0	E-3	Z-1-09623-163-0	G-10	Z-1-09680-024-0	C-4
Z-0-2808-1020-0	I-13	Z-0-2868-1040-0	K-2	Z-0-5005-1025-0	G-3	Z-1-09100-032-0	F-9	Z-1-09623-179-0	D-4	Z-1-09700-453-0	I-13
Z-0-2808-1025-0	K-2	Z-0-2868-1040-0	L-3	Z-0-5014-0818-0	I-8	Z-1-09100-033-0	F-9	Z-1-09623-283-0	C-16	Z-1-09701-242-0	G-3
Z-0-2808-1025-0	K-2	Z-0-2869-1025-0	L-3	Z-0-5014-0820-0	C-4	Z-1-09100-034-0	F-9	Z-1-09623-462-0	G-2	Z-1-09704-057-0	C-8
Z-0-2808-1050-0	H-6	Z-0-2869-1025-0	L-3	Z-0-5014-0822-0	C-4	Z-1-09300-018-0	E-2	Z-1-09623-465-0	C-4	Z-1-09707-084-1	E-3

M-3 PARTS NUMBER INDEX 部品番号順索引表

部品番号 PART No.	ロケーション LOCATION	部品番号 PART No.	ロケーション LOCATION	部品番号 PART No.	ロケーション LOCATION	部品番号 PART No.	ロケーション LOCATION	部品番号 PART No.	ロケーション LOCATION	部品番号 PART No.	ロケーション LOCATION
Z-1-09740-078-0	C-4	Z-1-11740-171-0	C-7	Z-1-12251-032-0	C-12	Z-1-13211-211-0	I-8	Z-1-13671-209-0	H-2	Z-1-14149-212-0	F-4
Z-1-09800-214-0	C-12	Z-1-11740-174-1	D-5	Z-1-12310-448-0	C-12	Z-1-13212-093-1	G-10	Z-1-13671-226-0	H-2	Z-1-14362-002-0	E-3
Z-1-11110-601-1	E-2	Z-1-11740-201-1	D-5	Z-1-12310-470-0	C-12	Z-1-13212-108-0	I-6	Z-1-13671-288-0	H-2	Z-1-14379-088-0	F-9
Z-1-11110-614-2	E-2	Z-1-11740-204-1	D-4	Z-1-12331-149-2	C-12	Z-1-13212-120-0	G-12	Z-1-13671-302-0	H-2	Z-1-14400-333-2	F-5
Z-1-11110-842-0	E-2	Z-1-11740-226-1	C-7	Z-1-12331-178-2	C-12	Z-1-13219-150-0	G-7	Z-1-13674-118-1	K-2	Z-1-14400-333-2	F-9
Z-1-11141-196-0	E-3	Z-1-11740-252-0	C-7	Z-1-12333-017-0	C-12	Z-1-13219-152-0	G-7	Z-1-13713-037-0	H-10	Z-1-14414-093-0	F-9
Z-1-11173-055-0	E-3	Z-1-11740-253-0	C-7	Z-1-12362-003-1	C-13	Z-1-13219-188-0	G-7	Z-1-13721-341-2	C-5	Z-1-14414-094-0	F-9
Z-1-11173-059-0	E-3	Z-1-11742-011-0	C-8	Z-1-12371-158-0	C-13	Z-1-13219-190-0	G-7	Z-1-13741-013-0	H-11	Z-1-14414-095-0	F-9
Z-1-11180-132-2	E-3	Z-1-11742-022-0	C-8	Z-1-12371-242-0	C-13	Z-1-13219-191-0	G-7	Z-1-13743-016-0	H-10	Z-1-14421-020-0	F-9
Z-1-11180-350-0	E-3	Z-1-11750-012-0	D-5	Z-1-12371-248-0	C-13	Z-1-13219-192-0	G-7	Z-1-13770-070-0	H-10	Z-1-14421-024-0	F-9
Z-1-11210-340-7	C-2	Z-1-11750-024-1	D-5	Z-1-12371-364-0	C-13	Z-1-13219-235-0	G-7	Z-1-13770-070-0	H-10	Z-1-14425-029-0	F-9
Z-1-11210-443-6	C-2	Z-1-11750-024-1	D-5	Z-1-12514-005-0	E-5	Z-1-13219-295-0	G-7	Z-1-13770-071-0	H-10	Z-1-14450-053-0	F-9
Z-1-11219-129-1	C-4	Z-1-11760-280-2	D-4	Z-1-12521-008-0	C-13	Z-1-13240-046-1	G-10	Z-1-13770-071-0	H-10	Z-1-14451-057-0	F-9
Z-1-11219-163-0	C-4	Z-1-11760-378-0	D-4	Z-1-12521-008-0	C-13	Z-1-13240-068-0	I-6	Z-1-14110-507-1	F-7	Z-1-14453-083-0	F-9
Z-1-11261-248-0	C-3	Z-1-11766-274-1	D-4	Z-1-12522-016-2	E-5	Z-1-13240-069-1	I-6	Z-1-14110-512-0	F-7	Z-1-14453-084-0	F-9
Z-1-11261-249-0	C-3	Z-1-11766-402-0	D-4	Z-1-12523-057-3	E-5	Z-1-13260-001-1	I-3	Z-1-14112-209-3	F-2	Z-1-14453-085-0	F-9
Z-1-11261-250-0	C-3	Z-1-11771-113-1	L-3	Z-1-12524-015-0	J-15	Z-1-13260-047-0	I-6	Z-1-14112-209-3	F-4	Z-1-14453-086-0	F-9
Z-1-11261-251-0	C-3	Z-1-11771-156-1	L-3	Z-1-12551-083-0	E-5	Z-1-13260-062-1	G-7	Z-1-14112-315-0	F-2	Z-1-14455-041-0	F-9
Z-1-11261-252-0	C-3	Z-1-11771-157-1	L-3	Z-1-12552-025-1	E-5	Z-1-13260-062-1	G-10	Z-1-14112-315-0	F-7	Z-1-14455-042-0	F-9
Z-1-11261-253-0	C-3	Z-1-11771-181-0	L-3	Z-1-12561-099-0	E-5	Z-1-13262-008-0	G-7	Z-1-14112-622-1	F-4	Z-1-15300-291-2	I-2
Z-1-11261-254-0	C-3	Z-1-11777-106-0	L-3	Z-1-12569-015-0	E-3	Z-1-13311-532-2	G-2	Z-1-14115-059-0	F-2	Z-1-15300-291-2	I-10
Z-1-11261-255-0	C-3	Z-1-11777-110-1	L-3	Z-1-12575-036-0	E-5	Z-1-13312-469-0	G-3	Z-1-14115-059-0	F-4	Z-1-15300-331-0	I-2
Z-1-11281-028-1	H-13	Z-1-11777-171-1	L-3	Z-1-12611-118-0	E-5	Z-1-13312-470-0	G-3	Z-1-14115-059-0	F-7	Z-1-15300-331-0	I-10
Z-1-11281-036-0	H-13	Z-1-12111-769-0	C-11	Z-1-12621-062-1	E-5	Z-1-13313-599-0	G-2	Z-1-14115-061-0	F-2	Z-1-15300-375-0	I-2
Z-1-11281-037-0	H-13	Z-1-12111-770-0	C-11	Z-1-13100-204-0	G-5	Z-1-13313-603-0	G-2	Z-1-14115-061-0	F-4	Z-1-15300-375-0	I-10
Z-1-11282-014-0	H-13	Z-1-12111-785-0	C-11	Z-1-13113-047-0	G-5	Z-1-13313-604-1	G-2	Z-1-14115-061-0	F-7	Z-1-15311-263-0	I-10
Z-1-11282-018-0	H-13	Z-1-12111-786-0	C-11	Z-1-13119-003-0	G-5	Z-1-13313-611-0	G-3	Z-1-14141-690-0	F-2	Z-1-15332-017-0	I-10
Z-1-11282-020-0	H-13	Z-1-12111-911-0	C-11	Z-1-13123-016-0	G-5	Z-1-13342-110-0	C-5	Z-1-14141-692-1	F-4	Z-1-15339-009-0	I-10
Z-1-11282-025-0	H-13	Z-1-12111-912-0	C-11	Z-1-13128-018-0	G-5	Z-1-13342-132-0	C-5	Z-1-14141-791-2	F-4	Z-1-15412-471-1	I-3
Z-1-11291-080-1	C-7	Z-1-12111-917-0	C-11	Z-1-13140-079-0	G-5	Z-1-13610-800-1	H-5	Z-1-14141-901-0	F-7	Z-1-15414-294-0	I-3
Z-1-11321-079-0	C-15	Z-1-12111-918-0	C-11	Z-1-13161-012-0	C-5	Z-1-13610-876-1	H-8	Z-1-14144-605-0	F-4	Z-1-15414-295-0	I-3
Z-1-11322-052-0	C-15	Z-1-12111-932-0	C-11	Z-1-13200-551-2	G-10	Z-1-13631-074-0	H-5	Z-1-14145-069-0	F-11	Z-1-15414-296-2	I-3
Z-1-11327-036-0	C-15	Z-1-12111-933-0	C-12	Z-1-13200-654-2	G-12	Z-1-13641-165-0	H-2	Z-1-14145-091-0	F-11	Z-1-15415-183-1	I-2
Z-1-11341-433-2	D-2	Z-1-12121-101-1	C-12	Z-1-13200-655-6	G-7	Z-1-13641-187-0	H-2	Z-1-14145-114-0	F-2	Z-1-15415-184-1	I-2
Z-1-11360-439-2	D-4	Z-1-12121-115-0	C-12	Z-1-13200-701-1	I-6	Z-1-13642-030-0	H-2	Z-1-14145-114-0	F-4	Z-1-15415-185-1	I-2
Z-1-11367-100-0	D-4	Z-1-12211-033-1	C-12	Z-1-13200-702-0	I-6	Z-1-13642-031-0	H-2	Z-1-14145-114-0	F-7	Z-1-15415-186-1	I-2
Z-1-11510-074-2	C-10	Z-1-12230-104-1	C-12	Z-1-13200-746-4	G-7	Z-1-13642-033-0	H-2	Z-1-14145-140-0	F-5	Z-1-15415-187-1	I-3
Z-1-11680-001-2	C-10	Z-1-12230-129-1	C-12	Z-1-13200-841-0	I-8	Z-1-13642-036-0	H-2	Z-1-14149-084-1	F-4	Z-1-15415-188-1	I-3
Z-1-11711-043-0	E-2	Z-1-12235-027-1	C-12	Z-1-13211-147-1	G-7	Z-1-13642-044-1	H-2	Z-1-14149-170-1	F-4	Z-1-15415-810-2	I-3
Z-1-11715-054-0	E-2	Z-1-12251-027-0	C-12	Z-1-13211-163-1	G-7	Z-1-13650-018-0	H-5	Z-1-14149-170-1	F-7	Z-1-15415-844-0	I-3

M-4 PARTS NUMBER INDEX 部品番号順索引表

部品番号 PART No.	ロケーション LOCATION	部品番号 PART No.	ロケーション LOCATION	部品番号 PART No.	ロケーション LOCATION	部品番号 PART No.	ロケーション LOCATION	部品番号 PART No.	ロケーション LOCATION	部品番号 PART No.	ロケーション LOCATION
Z-1-15415-845-0	I-3	Z-1-15629-004-0	J-3	Z-1-15729-038-0	J-8	Z-1-15755-002-0	J-13	Z-1-22140-561-3	F-11	Z-1-81121-037-0	K-11
Z-1-15415-846-0	I-3	Z-1-15629-007-0	J-5	Z-1-15729-092-0	J-10	Z-1-15759-002-0	J-13	Z-1-22151-466-0	F-11	Z-1-81121-052-1	K-9
Z-1-15415-847-0	I-2	Z-1-15629-008-0	J-5	Z-1-15729-098-0	J-10	Z-1-15759-003-0	J-13	Z-1-22151-468-4	F-11	Z-1-81123-024-0	K-6
Z-1-15415-848-0	I-2	Z-1-15629-010-0	J-2	Z-1-15729-099-0	J-10	Z-1-15759-011-0	J-5	Z-1-22151-700-1	F-11	Z-1-81123-025-0	K-6
Z-1-15415-849-0	I-2	Z-1-15629-015-0	J-3	Z-1-15729-101-0	J-8	Z-1-15759-011-0	J-13	Z-1-22151-714-1	F-11	Z-1-81127-031-0	K-6
Z-1-15415-850-0	I-2	Z-1-15629-017-0	J-5	Z-1-15729-172-0	J-8	Z-1-15759-029-0	J-13	Z-1-22151-739-0	F-11	Z-1-81127-032-0	K-12
Z-1-15415-851-1	I-3	Z-1-15629-018-0	J-2	Z-1-15729-226-0	J-8	Z-1-15759-042-0	J-13	Z-1-22151-740-0	F-11	Z-1-81129-184-0	K-6
Z-1-15415-852-1	I-3	Z-1-15629-047-0	J-5	Z-1-15729-279-0	J-10	Z-1-15759-043-0	J-13	Z-1-22159-120-0	F-11	Z-1-81129-184-0	K-12
Z-1-15415-884-0	I-3	Z-1-15629-105-0	J-5	Z-1-15729-294-0	J-11	Z-1-15761-006-0	J-13	Z-1-23314-122-0	I-13	Z-1-81129-185-0	K-6
Z-1-15602-969-0	I-12	Z-1-15631-026-0	J-10	Z-1-15729-295-0	J-11	Z-1-15770-870-0	I-12	Z-1-23335-188-1	I-13	Z-1-81129-196-0	K-5
Z-1-15603-040-0	I-12	Z-1-15631-069-0	J-1	Z-1-15729-296-0	J-11	Z-1-15770-870-0	J-8	Z-1-23335-188-1	I-13	Z-1-81129-196-0	K-11
Z-1-15603-260-0	I-12	Z-1-15634-007-0	J-3	Z-1-15729-297-0	J-11	Z-1-15779-040-0	J-9	Z-1-23335-477-0	I-13	Z-1-81129-234-0	K-12
Z-1-15603-261-0	I-12	Z-1-15634-011-0	J-1	Z-1-15729-298-0	J-11	Z-1-15779-093-0	J-11	Z-1-53215-126-0	L-4	Z-1-81129-384-0	K-5
Z-1-15603-300-0	I-15	Z-1-15639-003-0	J-3	Z-1-15729-299-0	J-11	Z-1-15779-094-0	J-11	Z-1-81100-141-1	K-2	Z-1-81129-384-0	K-11
Z-1-15603-301-0	I-15	Z-1-15639-022-0	J-3	Z-1-15729-301-0	J-10	Z-1-15779-191-0	J-11	Z-1-81100-141-1	K-9	Z-1-81129-385-0	K-5
Z-1-15603-302-0	I-15	Z-1-15639-023-0	J-3	Z-1-15729-636-0	J-9	Z-1-15779-502-0	J-8	Z-1-81100-191-1	K-2	Z-1-81129-386-0	K-6
Z-1-15611-184-0	J-1	Z-1-15639-088-0	J-4	Z-1-15729-642-0	J-8	Z-1-15779-508-0	J-8	Z-1-81100-191-1	K-5	Z-1-81129-386-0	K-12
Z-1-15612-050-0	J-1	Z-1-15639-088-0	J-4	Z-1-15729-643-0	J-8	Z-1-15779-564-0	J-11	Z-1-81100-206-1	K-2	Z-1-81129-387-0	K-6
Z-1-15619-003-0	J-1	Z-1-15641-031-0	J-1	Z-1-15729-644-0	J-8	Z-1-15779-565-0	J-11	Z-1-81100-206-1	K-11	Z-1-81129-394-0	K-7
Z-1-15619-024-0	J-1	Z-1-15644-009-0	J-1	Z-1-15729-689-0	J-10	Z-1-15779-567-0	J-11	Z-1-81113-026-0	K-6	Z-1-81129-395-0	K-5
Z-1-15619-033-0	J-5	Z-1-15649-001-0	J-1	Z-1-15729-891-0	J-9	Z-1-15780-168-0	I-12	Z-1-81113-073-0	K-6	Z-1-81129-396-0	K-5
Z-1-15619-092-0	J-5	Z-1-15649-005-0	J-1	Z-1-15729-892-0	J-9	Z-1-15780-168-0	J-15	Z-1-81113-075-0	K-11	Z-1-81129-396-0	K-11
Z-1-15619-103-0	J-1	Z-1-15719-093-0	J-5	Z-1-15729-893-0	J-9	Z-1-15780-172-0	I-12	Z-1-81113-076-0	K-12	Z-1-81129-397-0	K-6
Z-1-15619-162-0	J-2	Z-1-15721-023-0	J-9	Z-1-15729-960-0	J-1	Z-1-15780-172-0	I-15	Z-1-81113-077-0	K-11	Z-1-81129-397-0	K-11
Z-1-15619-190-0	J-1	Z-1-15722-017-0	J-9	Z-1-15730-009-0	I-12	Z-1-15780-172-0	J-15	Z-1-81114-018-0	K-9	Z-1-81129-402-0	K-12
Z-1-15619-191-0	J-1	Z-1-15723-028-0	J-11	Z-1-15730-009-0	J-8	Z-1-15781-016-0	J-15	Z-1-81115-061-0	K-5	Z-1-81129-403-0	K-12
Z-1-15619-237-0	J-5	Z-1-15723-186-0	J-10	Z-1-15730-041-0	I-12	Z-1-15789-094-0	J-15	Z-1-81115-062-0	K-5	Z-1-81129-418-0	K-12
Z-1-15619-243-0	J-5	Z-1-15723-212-0	J-11	Z-1-15730-041-0	I-15	Z-1-19191-914-0	D-5	Z-1-81115-065-0	K-11	Z-1-81129-677-0	K-9
Z-1-15619-246-0	J-15	Z-1-15723-223-0	J-11	Z-1-15730-041-0	J-8	Z-1-19387-007-0	E-3	Z-1-81115-066-0	K-11	Z-1-81129-696-0	K-9
Z-1-15619-247-0	J-15	Z-1-15723-224-0	J-10	Z-1-15730-042-0	I-12	Z-1-19389-004-0	E-3	Z-1-81116-042-0	K-5	Z-1-81151-034-0	K-9
Z-1-15619-282-0	J-5	Z-1-15723-284-0	J-10	Z-1-15730-042-0	J-8	Z-1-19623-016-0	J-13	Z-1-81116-042-0	K-11	Z-1-81200-249-3	K-2
Z-1-15619-282-0	J-9	Z-1-15723-369-0	J-11	Z-1-15730-055-0	I-15	Z-1-19623-016-0	J-13	Z-1-81116-043-0	K-5	Z-1-81200-249-3	K-14
Z-1-15619-282-0	J-9	Z-1-15723-432-0	J-11	Z-1-15730-055-0	J-8	Z-1-19751-049-0	J-5	Z-1-81116-043-0	K-11	Z-1-81200-365-0	K-3
Z-1-15619-326-0	J-5	Z-1-15725-011-0	J-10	Z-1-15750-154-0	I-12	Z-1-19751-120-0	I-12	Z-1-81116-044-0	K-5	Z-1-81200-365-0	L-1
Z-1-15621-070-0	J-3	Z-1-15725-344-0	J-10	Z-1-15750-154-0	J-13	Z-1-19751-120-0	I-15	Z-1-81116-044-0	K-11	Z-1-81211-062-0	K-14
Z-1-15622-003-0	J-2	Z-1-15725-449-0	J-11	Z-1-15750-162-0	I-12	Z-1-19755-094-1	I-8	Z-1-81117-014-0	K-5	Z-1-81211-090-0	L-1
Z-1-15622-006-0	J-1	Z-1-15725-917-0	J-10	Z-1-15750-162-0	I-15	Z-1-21700-249-1	H-13	Z-1-81117-014-0	K-11	Z-1-81212-003-0	K-14
Z-1-15629-001-0	J-2	Z-1-15729-001-0	J-11	Z-1-15750-162-0	J-13	Z-1-21700-293-0	H-13	Z-1-81118-036-0	K-5	Z-1-81213-052-0	K-14
Z-1-15629-002-0	J-3	Z-1-15729-002-0	J-11	Z-1-15751-012-0	J-13	Z-1-21700-298-0	H-13	Z-1-81118-036-0	K-11	Z-1-81213-067-0	L-1
Z-1-15629-003-0	J-3	Z-1-15729-015-0	J-8	Z-1-15754-002-0	J-13	Z-1-22140-560-2	F-11	Z-1-81121-037-0	K-5	Z-1-81214-175-0	K-14

M-5 PARTS NUMBER INDEX 部品番号順索引表

部品番号 PART No.	ロケーション LOCATION	部品番号 PART No.	ロケーション LOCATION	部品番号 PART No.	ロケーション LOCATION	部品番号 PART No.	ロケーション LOCATION	部品番号 PART No.	ロケーション LOCATION	部品番号 PART No.	ロケーション LOCATION
Z-1-81214-176-0	K-14	Z-1-81910-052-0	I-13	Z-1-87811-253-0	H-5	Z-1-87811-887-0	C-4	Z-5-09605-008-0	F-7	Z-5-11777-055-1	L-3
Z-1-81214-224-0	L-1	Z-1-82410-008-2	L-4	Z-1-87811-253-0	H-5	Z-1-87811-887-0	C-7	Z-5-09605-017-0	H-13	Z-5-12319-003-2	C-12
Z-1-81214-229-0	L-1	Z-1-82553-023-0	K-5	Z-1-87811-573-0	C-2	Z-1-87811-887-0	C-15	Z-5-09605-018-0	C-3	Z-5-12331-045-2	C-12
Z-1-81217-062-0	L-1	Z-1-82553-037-0	K-6	Z-1-87811-573-0	C-10	Z-1-87811-887-0	D-2	Z-5-09623-002-0	D-4	Z-5-12331-052-3	C-12
Z-1-81217-069-0	L-1	Z-1-83579-492-0	J-8	Z-1-87811-574-0	C-2	Z-1-87811-887-0	D-4	Z-5-09623-024-1	G-7	Z-5-12331-267-0	C-12
Z-1-81219-056-0	K-14	Z-1-87810-223-5	H-8	Z-1-87811-574-0	C-10	Z-1-87811-887-0	E-2	Z-5-09623-035-0	C-4	Z-5-12336-008-1	C-12
Z-1-81221-056-0	K-14	Z-1-87810-774-1	H-5	Z-1-87811-575-0	C-3	Z-1-87811-887-0	F-7	Z-5-09623-060-0	E-5	Z-5-12362-003-1	C-13
Z-1-81221-072-0	L-1	Z-1-87810-945-1	E-3	Z-1-87811-575-0	C-10	Z-1-87811-887-0	G-2	Z-5-09623-070-0	I-8	Z-5-12524-077-0	J-15
Z-1-81222-055-0	K-14	Z-1-87810-945-1	F-7	Z-1-87811-576-0	C-3	Z-1-87811-887-0	G-10	Z-5-09625-055-0	H-5	Z-5-12535-001-1	E-5
Z-1-81222-055-0	L-1	Z-1-87810-945-1	H-10	Z-1-87811-576-0	C-11	Z-1-87811-887-0	H-8	Z-5-09630-024-0	I-8	Z-5-12563-001-0	E-5
Z-1-81223-005-0	K-14	Z-1-87811-031-4	C-4	Z-1-87811-628-2	C-4	Z-1-87811-887-0	H-10	Z-5-09654-013-0	C-4	Z-5-12565-006-0	E-5
Z-1-81223-009-0	L-1	Z-1-87811-031-4	C-7	Z-1-87811-628-2	C-7	Z-1-87811-887-0	H-13	Z-5-09666-002-1	C-4	Z-5-12571-003-2	E-5
Z-1-81229-042-0	K-14	Z-1-87811-031-4	C-15	Z-1-87811-628-2	C-15	Z-1-87811-887-0	I-2	Z-5-09704-031-3	C-8	Z-5-12628-012-0	E-5
Z-1-81229-114-0	K-7	Z-1-87811-031-4	D-2	Z-1-87811-628-2	D-2	Z-1-87811-888-0	C-2	Z-5-09704-046-0	H-11	Z-5-13121-005-0	G-5
Z-1-81229-122-0	L-1	Z-1-87811-031-4	D-4	Z-1-87811-628-2	D-4	Z-1-87811-888-0	C-10	Z-5-09704-054-1	G-2	Z-5-13125-001-0	G-5
Z-1-81229-225-0	L-1	Z-1-87811-031-4	E-2	Z-1-87811-628-2	E-2	Z-1-87811-889-0	C-2	Z-5-09709-103-0	I-3	Z-5-13165-004-0	G-5
Z-1-81229-373-0	K-14	Z-1-87811-031-4	F-2	Z-1-87811-628-2	F-7	Z-1-87811-889-0	C-10	Z-5-09709-104-0	I-3	Z-5-13212-059-1	I-8
Z-1-81229-374-0	K-14	Z-1-87811-031-4	G-2	Z-1-87811-628-2	G-2	Z-1-87811-890-0	C-3	Z-5-09709-104-0	I-3	Z-5-13219-020-0	I-8
Z-1-81229-375-0	K-14	Z-1-87811-031-4	G-7	Z-1-87811-628-2	G-10	Z-1-87811-890-0	C-11	Z-5-09738-001-0	C-12	Z-5-13219-021-0	I-8
Z-1-81229-376-0	K-14	Z-1-87811-031-4	H-5	Z-1-87811-628-2	H-5	Z-1-87811-891-0	C-3	Z-5-09800-008-0	H-8	Z-5-13311-205-0	G-2
Z-1-81229-376-0	L-1	Z-1-87811-031-4	H-10	Z-1-87811-628-2	H-8	Z-1-87811-891-0	C-11	Z-5-09800-008-0	H-8	Z-5-13311-208-0	G-2
Z-1-81229-377-0	K-14	Z-1-87811-031-4	H-13	Z-1-87811-628-2	H-10	Z-1-87811-903-0	C-2	Z-5-09800-038-0	J-3	Z-5-13612-007-1	H-8
Z-1-81229-380-0	K-14	Z-1-87811-031-4	I-2	Z-1-87811-628-2	H-13	Z-1-87811-903-0	C-10	Z-5-09800-038-0	J-3	Z-5-13613-006-1	H-8
Z-1-81229-381-0	K-14	Z-1-87811-223-2	C-4	Z-1-87811-628-2	I-2	Z-1-87811-904-0	C-2	Z-5-09800-041-0	K-9	Z-5-13619-022-1	I-8
Z-1-81229-382-0	K-14	Z-1-87811-223-2	C-7	Z-1-87811-690-0	C-2	Z-1-87811-904-0	C-10	Z-5-09800-050-0	H-5	Z-5-13620-006-2	H-5
Z-1-81229-383-0	K-14	Z-1-87811-223-2	C-15	Z-1-87811-690-0	C-10	Z-1-87811-905-0	C-3	Z-5-09800-051-0	H-5	Z-5-13620-006-2	H-8
Z-1-81229-383-0	L-1	Z-1-87811-223-2	D-2	Z-1-87811-691-0	C-2	Z-1-87811-905-0	C-10	Z-5-09800-064-0	K-9	Z-5-13631-007-1	H-8
Z-1-81229-384-0	K-14	Z-1-87811-223-2	D-4	Z-1-87811-691-0	C-10	Z-1-87811-906-0	C-3	Z-5-09843-003-0	G-5	Z-5-13634-002-0	H-5
Z-1-81229-513-0	L-1	Z-1-87811-223-2	E-2	Z-1-87811-692-0	C-3	Z-1-87811-906-0	C-11	Z-5-11219-014-0	C-2	Z-5-13634-005-0	H-8
Z-1-81229-516-0	L-1	Z-1-87811-223-2	F-4	Z-1-87811-692-0	C-10	Z-5-09000-084-1	C-16	Z-5-11219-015-0	E-2	Z-5-13639-001-0	H-5
Z-1-81229-526-0	L-1	Z-1-87811-223-2	G-2	Z-1-87811-693-0	C-3	Z-5-09000-222-1	I-15	Z-5-11257-001-1	C-2	Z-5-13641-017-1	H-2
Z-1-81229-527-0	L-1	Z-1-87811-223-2	G-7	Z-1-87811-693-0	C-11	Z-5-09030-010-1	H-6	Z-5-11288-001-0	H-13	Z-5-13641-038-1	H-2
Z-1-81229-539-0	K-14	Z-1-87811-223-2	H-5	Z-1-87811-795-0	C-2	Z-5-09300-023-1	C-4	Z-5-11290-145-1	C-7	Z-5-13642-007-2	H-5
Z-1-81229-543-0	L-1	Z-1-87811-223-2	H-10	Z-1-87811-795-0	C-10	Z-5-09300-029-0	F-2	Z-5-11311-011-3	C-15	Z-5-13642-007-2	H-8
Z-1-81229-544-0	L-1	Z-1-87811-223-2	H-13	Z-1-87811-796-0	C-2	Z-5-09300-029-0	F-4	Z-5-11321-009-0	C-16	Z-5-13713-009-1	H-10
Z-1-81229-556-0	L-1	Z-1-87811-223-2	I-2	Z-1-87811-796-0	C-10	Z-5-09333-035-0	D-2	Z-5-11321-095-4	C-16	Z-5-13716-026-0	H-10
Z-1-81270-001-0	K-14	Z-1-87811-242-0	E-2	Z-1-87811-797-0	C-3	Z-5-09360-978-0	C-8	Z-5-11327-009-0	C-15	Z-5-13716-034-2	H-11
Z-1-81270-007-0	L-1	Z-1-87811-242-0	F-2	Z-1-87811-797-0	C-10	Z-5-09580-092-0	H-13	Z-5-11360-377-1	D-4	Z-5-13721-014-1	H-11
Z-1-81900-137-2	I-13	Z-1-87811-242-0	F-4	Z-1-87811-798-0	C-3	Z-5-09580-098-0	G-5	Z-5-11721-001-0	E-2	Z-5-13721-015-2	H-10
Z-1-81900-137-2	I-15	Z-1-87811-242-0	H-10	Z-1-87811-798-0	C-11	Z-5-09600-013-0	E-2	Z-5-11749-032-0	C-8	Z-5-14111-110-1	F-2

M-6 PARTS NUMBER INDEX 部品番号順索引表

部品番号 PART No.	ロケーション LOCATION	部品番号 PART No.	ロケーション LOCATION	部品番号 PART No.	ロケーション LOCATION	部品番号 PART No.	ロケーション LOCATION	部品番号 PART No.	ロケーション LOCATION	部品番号 PART No.	ロケーション LOCATION
Z-5-14111-243-4	F-7	Z-5-15619-109-0	J-2	Z-5-15725-050-0	J-10	Z-5-81129-092-0	K-9	Z-5-82410-012-2	L-4	Z-8-94370-661-0	H-8
Z-5-15311-019-0	I-10	Z-5-15619-110-0	J-2	Z-5-15725-057-0	J-10	Z-5-81129-119-0	K-9	Z-5-83539-024-0	J-5	Z-8-94370-670-0	G-7
Z-5-15311-027-0	I-10	Z-5-15619-136-0	J-1	Z-5-15725-122-0	J-11	Z-5-81129-120-0	K-9	Z-8-09160-508-0	F-7	Z-8-94370-670-0	G-10
Z-5-15315-003-0	I-2	Z-5-15619-156-0	J-5	Z-5-15729-027-0	J-8	Z-5-81129-121-0	K-9	Z-8-91325-397-0	J-8	Z-8-94370-671-0	C-15
Z-5-15332-006-0	I-10	Z-5-15619-160-0	J-1	Z-5-15729-027-0	J-8	Z-5-81129-126-0	K-9	Z-8-94107-575-1	C-12	Z-8-94370-675-0	I-12
Z-5-15339-060-0	I-10	Z-5-15621-025-0	J-3	Z-5-15729-033-0	J-9	Z-5-81129-127-0	K-9	Z-8-94107-713-2	G-2	Z-8-94370-675-0	I-15
Z-5-15343-005-0	I-10	Z-5-15625-001-0	J-1	Z-5-15729-034-0	J-9	Z-5-81129-128-0	K-9	Z-8-94110-111-0	E-3	Z-8-94371-853-2	C-15
Z-5-15411-223-1	I-3	Z-5-15629-015-0	J-3	Z-5-15729-053-0	J-9	Z-5-81129-134-0	K-9	Z-8-94114-579-0	E-5	Z-8-94416-377-0	I-8
Z-5-15411-223-1	I-4	Z-5-15629-015-0	J-4	Z-5-15729-054-0	J-9	Z-5-81129-136-0	K-9	Z-8-94133-937-3	E-5	Z-8-94434-075-0	H-2
Z-5-15419-001-0	I-3	Z-5-15629-016-0	J-4	Z-5-15729-071-0	J-8	Z-5-81129-142-0	K-6	Z-8-94133-937-3	E-5	Z-8-94453-746-0	I-8
Z-5-15611-025-0	J-1	Z-5-15629-016-0	J-4	Z-5-15729-099-0	J-11	Z-5-81129-144-0	K-6	Z-8-94137-682-0	C-8	Z-8-94457-517-0	J-15
Z-5-15619-001-0	J-2	Z-5-15629-017-0	J-4	Z-5-15729-102-0	J-9	Z-5-81129-144-0	K-11	Z-8-94144-588-0	J-1	Z-8-94457-910-2	C-15
Z-5-15619-002-0	J-2	Z-5-15629-017-0	J-4	Z-5-15729-123-0	J-8	Z-5-81129-145-0	K-6	Z-8-94144-588-0	J-10	Z-8-94483-894-0	H-2
Z-5-15619-003-0	J-2	Z-5-15629-018-0	J-4	Z-5-15729-123-0	J-9	Z-5-81129-145-0	K-11	Z-8-94148-079-0	C-4	Z-8-94483-897-1	H-2
Z-5-15619-004-0	J-2	Z-5-15629-018-0	J-4	Z-5-15729-124-0	J-9	Z-5-81129-146-0	K-6	Z-8-94148-617-1	G-8	Z-8-97015-754-0	C-5
Z-5-15619-005-0	J-2	Z-5-15629-019-0	J-4	Z-5-15729-167-0	J-9	Z-5-81129-146-0	K-12	Z-8-94148-617-1	G-12	Z-8-97016-147-1	I-10
Z-5-15619-007-0	J-2	Z-5-15629-019-0	J-4	Z-5-15729-209-0	J-10	Z-5-81129-147-0	K-6	Z-8-94149-756-0	J-1	Z-8-97022-216-0	C-15
Z-5-15619-008-0	J-2	Z-5-15629-020-0	J-4	Z-5-15729-286-0	J-9	Z-5-81129-148-0	K-6	Z-8-94152-613-0	D-4	Z-8-97023-339-0	C-4
Z-5-15619-009-0	J-2	Z-5-15629-020-0	J-4	Z-5-15729-287-0	J-9	Z-5-81129-148-0	K-12	Z-8-94162-568-0	C-8	Z-8-97024-238-0	J-10
Z-5-15619-010-0	J-2	Z-5-15629-038-0	J-4	Z-5-15751-012-0	J-13	Z-5-81129-149-0	K-7	Z-8-94162-568-0	C-8	Z-8-97024-239-0	J-10
Z-5-15619-011-0	J-2	Z-5-15629-038-0	J-4	Z-5-15754-001-0	J-13	Z-5-81129-149-0	K-12	Z-8-94164-027-0	F-7	Z-8-97024-240-0	J-10
Z-5-15619-012-0	J-2	Z-5-15629-045-0	J-1	Z-5-15781-003-0	J-15	Z-5-81129-150-0	K-7	Z-8-94167-793-0	J-9	Z-8-97026-750-0	J-1
Z-5-15619-013-0	J-2	Z-5-15629-049-0	J-5	Z-5-19381-001-3	E-3	Z-5-81129-150-0	K-12	Z-8-94169-502-0	I-10	Z-8-97027-601-1	C-16
Z-5-15619-015-0	J-2	Z-5-15629-090-0	J-4	Z-5-19619-049-0	J-9	Z-5-81129-151-0	K-6	Z-8-94169-503-0	I-10	Z-8-97028-525-0	C-7
Z-5-15619-025-0	J-2	Z-5-15629-090-0	J-4	Z-5-19711-031-2	K-2	Z-5-81129-151-0	K-12	Z-8-94171-110-0	J-1	Z-8-97028-525-0	C-7
Z-5-15619-026-0	J-2	Z-5-15637-003-0	J-3	Z-5-19732-001-1	L-4	Z-5-81129-155-0	K-5	Z-8-94171-185-0	J-13	Z-8-97030-285-1	I-2
Z-5-15619-027-0	J-2	Z-5-15639-002-0	J-5	Z-5-19732-002-1	L-4	Z-5-81129-155-0	K-11	Z-8-94171-853-0	K-9	Z-8-97030-285-1	I-10
Z-5-15619-034-0	J-2	Z-5-15643-001-0	J-1	Z-5-19751-004-2	I-12	Z-5-81129-156-0	K-5	Z-8-94173-054-0	L-1	Z-8-97039-537-0	J-9
Z-5-15619-035-0	J-2	Z-5-15643-009-0	J-2	Z-5-19751-004-2	I-15	Z-5-81129-156-0	K-11	Z-8-94173-060-0	L-1	Z-8-97041-664-0	J-1
Z-5-15619-036-0	J-2	Z-5-15644-017-0	J-1	Z-5-19751-050-0	J-5	Z-5-81129-158-0	K-6	Z-8-94173-061-0	L-1	Z-8-97047-604-0	L-4
Z-5-15619-037-0	J-2	Z-5-15719-008-0	J-9	Z-5-19789-003-0	I-13	Z-5-81129-158-0	K-12	Z-8-94205-986-1	H-13	Z-8-97063-823-0	J-10
Z-5-15619-039-0	J-4	Z-5-15721-004-0	J-8	Z-5-19789-003-0	I-15	Z-5-81129-159-0	K-6	Z-8-94235-157-0	C-8	Z-8-97069-902-0	H-2
Z-5-15619-039-0	J-4	Z-5-15721-020-0	J-8	Z-5-51339-003-0	I-10	Z-5-81129-159-0	K-12	Z-8-94316-991-0	F-5	Z-8-97083-337-0	J-6
Z-5-15619-041-0	J-2	Z-5-15721-022-0	J-8	Z-5-81118-013-0	K-9	Z-5-81129-160-0	K-6	Z-8-94320-308-0	I-10	Z-8-97085-022-0	J-11
Z-5-15619-044-0	J-1	Z-5-15721-026-0	J-9	Z-5-81118-019-0	K-6	Z-5-81129-160-0	K-12	Z-8-94340-192-0	E-3	Z-8-97137-910-0	C-13
Z-5-15619-048-0	J-15	Z-5-15722-008-0	J-9	Z-5-81118-019-0	K-12	Z-5-81129-214-0	K-7	Z-8-94364-869-2	D-2	Z-8-97137-910-0	C-13
Z-5-15619-049-0	J-5	Z-5-15723-088-0	J-11	Z-5-81122-016-0	K-6	Z-5-81129-214-0	K-12	Z-8-94367-368-1	C-7	Z-8-97138-086-0	H-11
Z-5-15619-106-0	J-2	Z-5-15723-128-0	J-9	Z-5-81122-016-0	K-11	Z-5-81151-036-0	K-6	Z-8-94367-530-1	C-7	Z-8-97138-086-0	H-11
Z-5-15619-107-0	J-2	Z-5-15723-160-0	J-9	Z-5-81123-018-0	K-9	Z-5-81151-036-0	K-12	Z-8-94367-530-1	C-7	Z-8-97138-534-0	J-8
Z-5-15619-108-0	J-2	Z-5-15725-042-0	J-11	Z-5-81124-004-0	K-9	Z-5-81229-192-0	K-14	Z-8-94370-661-0	H-6	Z-8-97138-535-0	J-10

M-7 PARTS NUMBER INDEX 部品番号順索引表

部品番号 PART No.	ロケーション LOCATION	部品番号 PART No.	ロケーション LOCATION	部品番号 PART No.	ロケーション LOCATION	部品番号 PART No.	ロケーション LOCATION	部品番号 PART No.	ロケーション LOCATION	部品番号 PART No.	ロケーション LOCATION
Z-8-97146-824-0	J-1	Z-9-0911-0408-0	E-3	Z-9-0915-0510-0	G-12	Z-9-0916-0710-0	I-15	Z-9-09662-012-0	D-4	Z-9-11224-602-1	C-4
Z-8-97179-670-0	J-11	Z-9-0911-0408-0	F-2	Z-9-0915-0510-0	H-8	Z-9-0916-0712-0	K-2	Z-9-09662-034-0	H-10	Z-9-11229-058-1	C-16
Z-9-00090-677-0	J-3	Z-9-0911-0408-0	F-4	Z-9-0915-0510-0	H-11	Z-9-0916-4010-0	F-4	Z-9-09664-005-0	H-10	Z-9-11291-605-1	C-7
Z-9-00090-677-0	J-3	Z-9-0911-0408-0	F-7	Z-9-0915-0510-0	I-3	Z-9-0916-4510-0	H-13	Z-9-09664-005-0	H-10	Z-9-11611-048-0	C-2
Z-9-00813-023-0	J-10	Z-9-0911-0408-0	I-2	Z-9-0915-0510-0	I-6	Z-9-0916-4510-0	J-5	Z-9-09715-067-0	C-8	Z-9-11613-035-0	C-2
Z-9-00813-023-0	J-11	Z-9-0911-0410-0	F-2	Z-9-0915-0510-0	I-8	Z-9-0916-4514-0	F-11	Z-9-09715-098-0	G-7	Z-9-11681-015-0	E-5
Z-9-0105-6045-0	H-8	Z-9-0911-0410-0	F-7	Z-9-0915-0510-0	I-12	Z-9-0916-4608-0	C-8	Z-9-09716-114-0	G-3	Z-9-11777-622-1	L-3
Z-9-0190-0614-0	J-5	Z-9-0911-0410-0	I-6	Z-9-0915-0510-0	I-12	Z-9-0916-4708-0	H-3	Z-9-09800-928-1	G-7	Z-9-12211-604-0	C-12
Z-9-0190-0616-0	J-9	Z-9-0911-0410-0	I-13	Z-9-0915-0510-0	I-15	Z-9-0916-4708-0	H-3	Z-9-09800-928-1	G-7	Z-9-12271-608-0	C-12
Z-9-0190-0616-0	J-9	Z-9-0911-0410-0	I-15	Z-9-0915-0510-0	I-15	Z-9-0918-0019-0	E-6	Z-9-09800-928-1	G-10	Z-9-12333-607-0	C-12
Z-9-0190-0616-0	J-9	Z-9-0911-0508-0	C-7	Z-9-0915-0510-0	L-4	Z-9-0918-0147-0	H-8	Z-9-09801-334-0	C-12	Z-9-12379-045-0	C-13
Z-9-0190-0616-0	J-11	Z-9-0911-0508-0	C-8	Z-9-0915-0510-0	L-4	Z-9-0918-0152-0	H-5	Z-9-09830-078-0	E-2	Z-9-12521-043-0	C-12
Z-9-0190-0818-0	J-8	Z-9-0911-0508-0	D-4	Z-9-0915-0510-0	L-4	Z-9-0918-5404-0	J-10	Z-9-09830-163-0	E-2	Z-9-12531-030-0	E-5
Z-9-0190-0822-0	H-8	Z-9-0911-0508-0	D-4	Z-9-0915-0512-0	K-2	Z-9-0918-5415-0	J-10	Z-9-09840-107-1	C-13	Z-9-12616-042-0	E-5
Z-9-0206-1022-0	L-3	Z-9-0911-0510-0	I-8	Z-9-0915-0512-0	K-3	Z-9-0952-4555-0	I-3	Z-9-09842-007-0	F-5	Z-9-12626-005-0	E-5
Z-9-0206-1028-0	L-4	Z-9-0911-0510-0	L-4	Z-9-0915-0514-0	F-11	Z-9-0956-2215-0	G-10	Z-9-09844-022-0	G-2	Z-9-12628-105-0	E-5
Z-9-0309-0820-0	H-5	Z-9-0911-1410-0	H-13	Z-9-0915-0514-0	K-2	Z-9-0956-2215-0	H-13	Z-9-09844-565-0	F-2	Z-9-13119-010-0	G-5
Z-9-0349-0610-0	H-2	Z-9-0911-1508-0	E-5	Z-9-0915-0514-0	L-3	Z-9-0957-1410-0	C-16	Z-9-09851-430-0	E-5	Z-9-13226-011-0	G-7
Z-9-0392-0614-0	I-13	Z-9-0912-0410-0	F-11	Z-9-0915-0610-0	J-5	Z-9-0957-1410-0	G-2	Z-9-09851-430-0	E-6	Z-9-13263-010-0	G-10
Z-9-0401-0828-0	F-7	Z-9-0915-0506-0	J-9	Z-9-0916-0506-0	I-13	Z-9-0957-1412-0	C-4	Z-9-09851-431-0	C-13	Z-9-13263-010-0	H-13
Z-9-0410-1030-0	J-5	Z-9-0915-0506-0	L-3	Z-9-0916-0508-0	C-7	Z-9-0957-1414-0	C-4	Z-9-09851-850-3	E-5	Z-9-13612-802-0	H-5
Z-9-0411-0825-0	E-2	Z-9-0915-0508-0	C-7	Z-9-0916-0508-0	C-16	Z-9-0957-1416-0	C-16	Z-9-09851-934-0	I-12	Z-9-13613-613-0	H-5
Z-9-0411-0825-0	E-3	Z-9-0915-0508-0	D-4	Z-9-0916-0508-0	D-4	Z-9-0957-1416-0	H-10	Z-9-09851-934-0	I-15	Z-9-13621-802-0	H-5
Z-9-0441-1025-0	F-2	Z-9-0915-0508-0	D-5	Z-9-0916-0508-0	F-2	Z-9-0957-1416-0	H-10	Z-9-09860-019-0	C-3	Z-9-13621-802-0	H-8
Z-9-0441-1025-0	F-7	Z-9-0915-0508-0	E-3	Z-9-0916-0508-0	F-2	Z-9-0957-1424-0	D-5	Z-9-09902-238-0	L-4	Z-9-14141-276-1	F-2
Z-9-0441-1028-0	F-2	Z-9-0915-0508-0	F-2	Z-9-0916-0508-0	F-4	Z-9-0957-2008-0	C-7	Z-9-09912-976-0	D-5	Z-9-14149-653-0	F-2
Z-9-0441-1028-0	F-4	Z-9-0915-0508-0	F-4	Z-9-0916-0508-0	F-7	Z-9-0957-2008-0	I-15	Z-9-09914-701-0	C-5	Z-9-15339-051-0	I-2
Z-9-0441-1028-0	F-7	Z-9-0915-0508-0	F-7	Z-9-0916-0508-0	H-14	Z-9-0957-2010-0	G-8	Z-9-09914-701-0	G-7	Z-9-15347-003-0	I-10
Z-9-0441-1030-0	F-2	Z-9-0915-0508-0	F-7	Z-9-0916-0508-0	I-12	Z-9-0957-2010-0	G-10	Z-9-09915-553-1	D-5	Z-9-15419-612-0	I-3
Z-9-0441-1030-0	F-5	Z-9-0915-0508-0	F-2	Z-9-0916-0508-0	I-15	Z-9-0957-2014-0	C-4	Z-9-09915-666-1	C-8	Z-9-81215-115-0	J-1
Z-9-0441-1030-0	F-7	Z-9-0915-0508-0	H-2	Z-9-0916-0508-0	I-15	Z-9-0957-2014-0	C-4	Z-9-09916-755-0	L-3	Z-9-81215-144-0	J-1
Z-9-0473-1025-0	F-4	Z-9-0915-0508-0	I-2	Z-9-0916-0510-0	G-8	Z-9-0957-5208-0	E-3	Z-9-09917-105-1	G-2	Z-9-81215-185-0	J-2
Z-9-0803-0713-0	E-5	Z-9-0915-0508-0	I-12	Z-9-0916-0510-0	G-10	Z-9-09602-148-0	E-5	Z-9-09920-526-0	G-7	Z-9-81221-223-0	J-1
Z-9-0810-4030-0	G-5	Z-9-0915-0508-0	I-15	Z-9-0916-0510-0	G-12	Z-9-09630-026-0	E-2	Z-9-09921-188-0	G-2	Z-9-81222-220-0	J-2
Z-9-0811-1612-0	I-13	Z-9-0915-0508-0	I-15	Z-9-0916-0510-0	H-11	Z-9-09630-026-0	E-2	Z-9-09952-143-0	H-5	Z-9-81225-033-0	J-4
Z-9-0815-1018-0	C-4	Z-9-0915-0510-0	C-8	Z-9-0916-0510-0	I-6	Z-9-09651-069-0	D-2	Z-9-09952-143-0	H-8	Z-9-81225-033-0	J-4
Z-9-0815-1018-0	C-15	Z-9-0915-0510-0	E-5	Z-9-0916-0514-0	K-2	Z-9-09660-034-0	E-2	Z-9-11129-128-0	E-2	Z-9-81225-043-0	J-5
Z-9-0815-1022-0	C-13	Z-9-0915-0510-0	F-2	Z-9-0916-0710-0	I-12	Z-9-09661-005-0	H-10	Z-9-11129-601-0	E-2	Z-9-81225-047-0	J-3
Z-9-0815-1220-0	C-12	Z-9-0915-0510-0	F-7	Z-9-0916-0710-0	I-12	Z-9-09661-005-0	H-10	Z-9-11179-030-0	E-3	Z-9-81225-047-0	J-3
Z-9-0911-0408-0	D-5	Z-9-0915-0510-0	F-11	Z-9-0916-0710-0	I-15	Z-9-09662-007-0	J-15	Z-9-11179-105-0	E-3	Z-9-81225-049-0	J-4

M-8 PARTS NUMBER INDEX 部品番号順索引表

部品番号 PART No.	ロケーション LOCATION	部品番号 PART No.	ロケーション LOCATION	部品番号 PART No.	ロケーション LOCATION	部品番号 PART No.	ロケーション LOCATION	部品番号 PART No.	ロケーション LOCATION	部品番号 PART No.	ロケーション LOCATION
Z-9-81225-050-0	J-4	Z-9-8135-1406-0	J-13	530C2-72131	K-2						
Z-9-81225-051-0	J-4	Z-9-8135-1410-0	J-13								
Z-9-81225-052-0	J-4	Z-9-8135-1416-0	J-13								
Z-9-81225-053-0	J-5	Z-9-8135-1702-0	J-13								
Z-9-81225-054-0	J-5	Z-9-8135-5025-0	J-13								
Z-9-81225-057-0	J-3	Z-9-8135-5035-0	J-13								
Z-9-81225-058-0	J-3	Z-9-8139-1906-0	J-11								
Z-9-81225-059-0	J-3	Z-9-8139-1907-0	J-11								
Z-9-81231-523-0	J-3	Z-9-8211-6140-0	K-6								
Z-9-81235-003-0	J-3	Z-9-8211-6140-0	K-12								
Z-9-81235-015-0	J-3	Z-9-8211-6142-0	K-7								
Z-9-81235-017-0	J-1	Z-9-8211-6142-0	K-12								
Z-9-81235-021-0	J-3	Z-9-8221-5867-0	K-14								
Z-9-81235-042-0	J-2	Z-9-8221-5867-0	L-1								
Z-9-81235-043-0	J-2	Z-9-8251-3928-9	L-4								
Z-9-81235-044-0	J-2	Z-9-8293-1743-0	G-8								
Z-9-81235-045-0	J-2	Z-9-8293-2211-0	K-3								
Z-9-81235-046-0	J-1	Z-9-8441-0027-0	J-8								
Z-9-81315-065-0	J-8	Z-9-8441-0027-0	J-8								
Z-9-81321-205-0	J-10	Z-9-8841-0027-0	J-9								
Z-9-81322-235-0	J-9	Z-9-8841-0037-0	J-10								
Z-9-81325-030-0	J-10	Z-9-8841-0066-0	J-5								
Z-9-81325-062-0	J-10	Z-9-8841-0264-0	J-15								
Z-9-81325-086-0	J-9	Z-9-8841-0502-0	J-15								
Z-9-81325-088-0	J-9	Z-9-9106-6450-0	D-2								
Z-9-81325-097-0	J-10	Z-9-9106-6465-0	D-2								
Z-9-81325-173-0	J-10	Z-9-9206-1428-0	E-5								
Z-9-81325-177-0	J-9	Z-9-9206-1638-0	C-12								
Z-9-81325-182-0	J-8	Z-9-9349-0510-0	E-3								
Z-9-81325-210-0	J-11	Z-9-9441-1235-0	D-2								
Z-9-81325-391-0	J-8	Z-9-9911-0412-0	K-2								
Z-9-81325-429-0	J-8	Z-9-9911-0412-0	K-3								
Z-9-81325-488-0	J-10	Z-9-9911-0414-0	D-2								
Z-9-81325-551-0	J-9	Z-9-9911-0414-0	K-2								
Z-9-81325-552-0	J-9	Z-9-9920-2312-0	C-3								
Z-9-81325-553-0	J-9	Z-9-9920-2314-0	C-3								
Z-9-81326-112-0	J-8	20801-01251	G-12								
Z-9-8135-1205-0	J-13	20801-01391	G-7								
Z-9-8135-1302-0	J-13	530C2-72111	K-2								
Z-9-8135-1403-0	J-13	530C2-72121	K-2								

A-6BG1QC, A-6BG1TQC, A-6BG1QC02, A-6BG1QC03, A-6BG1QC05,
A-6BG1QC05S, A-6BG1QC06, A-6BG1QC07, A-6BG1QC08, A-6BG1QC09

Microfiche (Film type)		Parts Manual (Book type)	
Issued	Order No.	Book No.	Issued
Sep., 1995	MFE-A-6BG1QCA	PE-A-6BG1QCA	Sep., 1998
Mar., 1998	MFE-A-6BG1QCB	PE-A-6BG1QCB	Mar., 1998
Aug., 1998	MFE-A-6BG1QCC	PE-A-6BG1QCC	Jul., 1998
Jul., 1999	MFE-A-6BG1QCD	PE-A-6BG1QCD	Aug., 1998
		PE-A-6BG1QCE	Jun., 1999
		PE-A-6BG1QCF	Jul., 1999

TCM株式会社
本　社　　大阪市西区京町堀１－１５－１０
発　行　　ＴＣＭテクノ株式会社

TCM CORPORATION
INTERNATIONAL MARKETING DIVISION: 1-15-5, Nishi-shimbashi, Minato-ku, Tokyo
105-0003, Japan
FAX: Japan +81-3-35918152, 3-35918153

無断で転載・複製を禁ず
All rights reserved.
X-1107003(N) Printed in Japan

TCM株式会社